Gerald Cisneros, Chairman
John Galusha, Commissioner
Arica Andreatta, Commissioner

Board of County Commissioners

PUBLIC MEETING NOTICE
AGENDA

August 17, 2021

8:30 – COMMISSIONERS MEETING WITH STAFF

10:00 – PUBLIC MEETING

1. **PLEDGE OF ALLEGIANCE**
2. **AGENDA APPROVAL**
3. **CONSENT AGENDA**
4. **PUBLIC COMMENT**
5. **APPOINTMENTS:**
   -
6. **LAND USE:**
   - Jill Sneed-Williams – Building Permit Renewal
   - Richard Schubert – Accessory Building
7. **ACTION ITEMS:**

   See Action Items List
8. **CORRESPONDENCE:**
9. **ATTORNEY REPORT**
10. **EXECUTIVE SESSION**
11. **ADJOURNMENT**

Location: **Join Virtual Zoom Meeting**

Meeting Info: https://us02web.zoom.us/j/82550511219
Meeting ID: 825-5051-1219

UPCOMING MEETINGS:

11:00 am HC Department Human Services
Meeting Info: https://us02web.zoom.us/j/82550511219
Meeting ID: 825-5051-1219
Location: 401 Main Street, Suite 309, Walsenburg, CO 81089

1:00 pm Broadband Workshop
Meeting Info: https://us02web.zoom.us/j/82550511219
Meeting ID: 825-5051-1219
Location: 401 Main Street, Suite 309, Walsenburg, CO 81089

Consent Agenda	
	August 17,2021
ITEM	**SUBJECT**
BOCC Minutes	August 10, 2021 Meeting
July 2021 Balance Sheet	HC Finance
July 2021 Revenue Report	HC Finance
July 2021 Expenditure Report	HC Finance
HR Status Sheet	Justin Novak New Hire Detention
HR Status Sheet	New Hire Land Use

COMMISSIONERS' MEETING
August 10, 2021

Chairman Cisneros called the meeting to order followed by the Pledge of Allegiance. Meetings are now opened to the Public and also by ZOOM.

Commissioners John Galusha, Gerald Cisneros and Arica Andreatta were present.

Chairman Cisneros called for a motion to approve the August 10, 2021 Agenda.
Motion: Andreatta **Second: Galusha**
Discussion: To add Board of Equalization to Agenda.
Resolved: Motion passed by unanimous vote.
Andreatta: Yes
Galusha: Yes
Chairman Cisneros: Yes

Chairman Cisneros called for a motion to approve the Consent Agenda as presented.
Motion: Galusha **Second: Andreatta**
Discussion:

- **BOCC minutes for August 3, 2021**
- **Adjustment of Douglas Bruce Abatement (#21-22) Schedule #21295 for the year 2020 from $165.07 to $155.68.**
- **Abatement on behalf of Stephan Leone #21-23, for the year 2020 in the amount of $717.96.**
- **HR Status sheet-Arius A. Gallegos, new hire Department of Social Services**
- **HR Status sheet-David Whitehead SO Detention Officer increase in salary**
- **HR Status sheet-Dena Ezell new hire SO Detention Officer**
- **HR Status sheet-Vicki Glicher new hire Huerfano County Finance Officer**

Resolved: Motion passed by unanimous vote.
Andreatta: Yes
Galusha: Yes

Chairman Cisneros: Yes

10:03 A.M. Public Comment:

Max Vezzani (former Commissioner) introduced his granddaughter Kate Vezzani to the Board. Kate is taking a course in Constitutional Law at Mullin High School. Kate has been assign to see how Colorado Government works in real time and to interview Elected Officials and what their job positions entail.
Mr. Vezzani thanked Carl and Gerald for accommodating her.

Eric Mullen with the Huerfano World Journal asked the Board if they had any information on the Solano case and if County Attorney Matthew Krob had filed any stipulations at this time. Mr. Krob answered that no stipulation had been filed at this time.

10:06 A.M. Appointments: None

10:06 A.M. Land Use: None

10:06 A.M. Action Items:

Amanda Hollman introduced herself to the Board regarding the appointment to the Cuchara Mountain Park Advisory Board.
County Administrator Carl Young and the Board reviewed action items.

To adopt Resolution #21-26, A RESOLUTION APPOINTING AMANDA HOLLEMAN TO THE HUERFANO COUNTY CUCHARA MOUNTAIN PARK ADVISORY BOARD FOR A TERM EXPIRING ON DECEMBER 31, 2023.

1. **Motion: Galusha** **Second: Andreatta**

Discussion: None
Resolved: Motion passed by unanimous vote.
Andreatta: Yes
Galusha: Yes
Chairman Cisneros: Yes

2. Permit and Agreement for Bulk Water Use for Amber Vansant.

Motion: **Andreatta** **Second:** **Galusha**
Discussion: **Application denied.**
Resolved: **Motion passed by unanimous vote.**
Galusha: Yes
Andreatta: Yes
Chairman Cisneros: Yes

3. To approve the Contract for Services Agreement: Training Contractor: Julie Valdez for no longer than 90 days.

Motion: **Galusha** **Second:** **Andreatta**
Discussion: **Commissioner Galusha asked that next time we have a Contract for Services, to have the contractor sign the agreement before bringing it to the Board.**
Resolved: **Motion passed by unanimous vote.**
Galusha: Yes
Andreatta: Yes
Chairman Cisneros: Yes

4. To approve the Climate Systems Quote-Swamp Cooler Repairs in the amount of $1,920.00 for the jail.

Motion: **Galusha** **Second:** **Andreatta**
Discussion: **None**
Resolved: **Motion passed by unanimous vote.**
Galusha: Yes
Andreatta: Yes
Chairman Cisneros: Yes

5. To approve the 2021 Emergency Management Performance Grant Program (EMPG) Award Letter-21EM-22-24 in the amount of $32,000.00 with Colorado Department of Public Safety and Colorado Division of Homeland Security & Emergency Management.

Motion: **Galusha** **Second:** **Andreatta**
Discussion: **None**

Resolved: **Motion passed by unanimous vote.**
Galusha: Yes
Andreatta: Yes
Chairman Cisneros: Yes

6. To approve the DOLA REDI Grant 21254 Huerfano County Gardner Mixed Use Development project in the amount of $100,000.00.

Motion: **Andreatta** **Second:** **Galusha**
Discussion: **None**
Resolved: **Motion passed by unanimous vote.**
Galusha: Yes
Andreatta: Yes
Chairman Cisneros: Yes

7. To approve the Contract Amendment #1. Amendment Agreement for Professional Services with Graver, LLC for Project #21A25200.

Motion: **Galusha** **Second:** **Andreatta**
Discussion: **None**
Resolved: **Motion passed by unanimous vote.**
Andreatta: Yes
Galusha: Yes
Chairman Cisneros: Yes

8. To sign the Huerfano RE-1 IGA Agreement between Huerfano County Clerk & Recorder and Huerfano RE-1 School District regarding Election Services.

Motion: **Andreatta** **Second:** **Galusha**
Discussion: **None**
Resolved: **Motion passed by unanimous vote.**
Galusha: Yes
Andreatta: Yes
Chairman Cisneros: Yes

9. Payment of July 2021 Schedule of Bills.

Motion: **Galusha** **Second:** **Andreatta**
Discussion: **None**
Resolved: **Motion passed by unanimous vote.**
Andreatta: Yes
Galusha: Yes
Chairman Cisneros: Yes

10. Payment on behalf of HOEHN Architects P.C. for Huerfano County Courthouse-Masonry Restoration Phase 3 in the amount of $3,517.45.

Motion: **Andreatta** **Second:** **Galusha**
Discussion: **None**
Resolved: **Motion passed by unanimous vote.**
Galusha: Yes
Andreatta: Yes
Chairman Cisneros: Yes

11. Permit and Agreement for Bulk Water Use for James Blackshear at the Gardner Water and Sewer Public Improvement District on County Road 634, Gardner.

Motion: **Galusha** **Second:** **Andreatta**
Discussion: **Denied, there is no permanent house on property.**
Resolved: **Motion passed by unanimous vote.**
Andreatta: Yes
Galusha: Yes
Chairman Cisneros: Yes

12. Permit and Agreement for Bulk Water Use for Edward R. Garcia at the Gardner Water and Sewer Public Improvement District on State Highway 69.

Motion: **Andreatta** **Second:** **Chairman Cisneros**
Discussion: **Motion to deny. Commissioner Galusha suggested that a policy be put in place for emergency approval should someone has a well that goes dry.**
Resolved: **Motion passed by unanimous vote.**

Andreatta: Yes
Galusha: No
Chairman Cisneros: Yes

13. To approve the quote for $1,034.63 from Wear Parts & Equipment Company, Inc. for teeth and wear plates for loader (#280).

Motion: Galusha **Second: Andreatta**
Discussion:
Resolved: Motion passed by unanimous vote.
Andreatta: Yes
Galusha: Yes
Chairman Cisneros: Yes

10:27 A.M. Correspondence:
County Administrator Carl Young and the Board reviewed correspondence.

10:29 A.M. Attorney's Report:
Attorney Matthew Krob requested an Executive Session with the Board for the purpose of determining positions relative to matters that may be subject to negotiations, developing strategy for negotiations, and/or instructing negotiators, under C.R.S.§24-6-402(4)(e).

Chairman Cisneros asked for a motion to go into Executive Session.
Motion: Galusha **Second: Andreatta**
Discussion: None
Resolved: Motion passed by unanimous vote.
Andreatta: Yes
Galusha: Yes
Chairman Cisneros: Yes

10:59 A.M.
Chairman Cisneros called for a motion to go back into Regular Session.
Motion: Galusha **Second: Andreatta**

Discussion: **None**
Resolved: **Motion passed by unanimous vote.**
Andreatta: Yes
Galusha: Yes
Chairman Cisneros: Yes

Commissioners convene @ 11:00 A.M. as Board of Equalization:
Motion: **Galusha** **Second:** **Andreatta**
Discussion: **None**
Resolved: **Motion passed by unanimous vote.**
Andreatta: Yes
Galusha: Yes
Chairman Cisneros: Yes

The Board reconvened back to regular session at 11:04 A.M.

Chairman Cisneros called for a motion to adjourn meeting.
Motion: **Andreatta** **Second:** **Galusha**
Discussion: **None**
Resolved: **Motion passed by unanimous vote.**
Galusha: Yes
Andreatta: Yes
Chairman Cisneros: Yes

Meeting adjourned @ 11:04 A.M.

_____

Nancy C. Cruz, County Clerk & Recorder
Clerk to the Board of County Commissioners

COMMISSIONERS:

_____

Gerald A. Cisneros, Chairman

_____

John Galusha, Vice Chairman

_____

Arica Andreatta

Report Selection:

Calendar Start Date..... 01 01 2021

Calendar End (As Of) Date..... 07 31 2021

Print Accounts with Zero Balances.. N (Y/N)

Inclusion Ranges: Begin End
Fund.....

Run Instructions:

Jobq	Banner	Copies	Form	Printer	Hold	Space	LPI	Lines	CPI	CP	SP	RT
L		01		COHUPRT14	Y	S	6	066	10			

Balance Sheet
JUL 31, 2021

----FUND---- 001 GENERAL FUND

ACCOUNT		BEGINNING BALANCE	ACTUAL-THIS MONTH	ACTUAL-THIS YEAR	ENDING BALANCE
	ASSETS				
	CURRENT ASSETS:				
001.10200	CASH IN BANK/TREASURER	1,878,798.64	97,943.21CR	1,163,869.06	3,042,667.70
001.10320	CASH IN BANK/REVOLVING LOAN	1,500.00	0.00	0.00	1,500.00
001.10425	PETTY CASH/TREASURER	680.00	0.00	0.00	680.00
001.10430	PETTY CASH/COUNTY CLERK	200.00	0.00	0.00	200.00
001.10450	PETTY CASH	1,000.00	0.00	0.00	1,000.00
001.10500	PROP. TAXES RECEIVABLE	2,297,756.00	0.00	0.00	2,297,756.00
001.10700	SALES TAX RECEIVABLE	217,496.96	0.00	0.00	217,496.96
001.10800	JC SALES TAX COLLECTED	235,220.18	0.00	0.00	235,220.18
	TOTAL CURRENT ASSETS:	4,632,651.78	97,943.21CR	1,163,869.06	5,796,520.84
	TOTAL ASSETS:	4,632,651.78	97,943.21CR	1,163,869.06	5,796,520.84
	LIABILITIES AND FUND BALANCE				
	CURRENT LIABILITIES:				
001.20200	ACCOUNTS PAYABLE	47,465.92CR	0.00	0.00	47,465.92CR
001.21791	INSURANCE PAYABLE (DEN/VIS)	287,957.23CR	3,546.14CR	25,079.44CR	313,036.67CR
001.21792	INSURANCE PAYABLE/EQUIT	63.00	0.00	0.00	63.00
001.21793	INSURANCE PAYABLE/COL	80.63	0.00	0.00	80.63
001.21796	RETIREMENT PAYABLE ACCT.	1,482.03	0.00	0.00	1,482.03
001.21798	JUDGEMENTS PAYABLE ACCT.	608.68CR	0.00	0.20	608.48CR
001.21800	INSURANCE PAYABLE/CCI	298,212.96	4,332.96	26,553.03	324,765.99
001.21801	SUPPLEMENTAL INSURANCE/CCI	267.62CR	0.00	14.10CR	281.72CR
001.21803	EMPLOYEE HEALTH DEDUCTION	43.58CR	115.03	618.22	574.64
001.21804	RETIREMENT LOAN PAYABLE	1,380.24	0.00	0.00	1,380.24
001.21805	AMERICAN FIDELITY (PAYABLE)	296.75	96.98CR	145.01CR	151.74
001.21806	TEXAS LIFE PAYABLE	22.73CR	21.64CR	21.77CR	44.50CR
001.22200	DEFERRED REVENUES	2,297,756.00CR	0.00	0.00	2,297,756.00CR
001.24500	DUE TO OTHER FUNDS	22,500.00CR	0.00	0.00	22,500.00CR
	TOTAL CURRENT LIABILITIES:	2,355,106.15CR	783.23	1,911.13	2,353,195.02CR
	TOTAL LIABILITIES:	2,355,106.15CR	783.23	1,911.13	2,353,195.02CR
	FUND BALANCE:				
001.22000	REVENUE CONTROL ACCOUNT	0.00	428,760.98CR	4,835,113.81CR	4,835,113.81CR
001.23000	EXPENDITURE CONTROL ACCT.	0.00	525,920.96	3,669,333.62	3,669,333.62
001.28000	FUND BALANCE	2,277,545.63CR	0.00	0.00	2,277,545.63CR
	TOTAL FUND BALANCE:	2,277,545.63CR	97,159.98	1,165,780.19CR	3,443,325.82CR
	TOTAL LIABILITIES AND FUND BALANCE:	4,632,651.78CR	97,943.21	1,163,869.06CR	5,796,520.84CR
	TOTAL FUND:	0.00	0.00	0.00	0.00

----FUND---- 002 ROAD & BRIDGE FUND

ACCOUNT		BEGINNING BALANCE	ACTUAL-THIS MONTH	ACTUAL-THIS YEAR	ENDING BALANCE
	ASSETS				
	CURRENT ASSETS:				
002.10200	CASH IN BANK/TREASURER	257,525.94	262,075.46	194,963.61	452,489.55
002.10500	PROP. TAXES RECEIVABLE	13,374.00	0.00	0.00	13,374.00
002.14100	INVENTORIES	34,587.71	0.00	0.00	34,587.71
	TOTAL CURRENT ASSETS:	305,487.65	262,075.46	194,963.61	500,451.26
	TOTAL ASSETS:	305,487.65	262,075.46	194,963.61	500,451.26
	LIABILITIES AND FUND BALANCE				
	CURRENT LIABILITIES:				
002.20200	ACCOUNTS PAYABLE	42,169.86CR	0.00	0.00	42,169.86CR
002.21700	FED. WITHHOLDING PAYABLE	3.74	0.00	0.00	3.74
002.21720	OASI PAYABLE	102.98	0.00	0.00	102.98
002.21721	MEDICARE PAYABLE	10.60	0.00	0.00	10.60
002.21791	INSURANCE PAYABLE (DEN/VIS)	122,563.40CR	1,554.93CR	10,884.51CR	133,447.91CR
002.21792	INSURANCE PAYABLE/EQUIT	10.00CR	0.00	20.00CR	30.00CR
002.21793	INSURANCE PAYABLE/COL	8.00	0.00	0.00	8.00
002.21796	RETIREMENT PAYABLE ACCT.	81.44CR	0.00	0.00	81.44CR
002.21798	JUDGEMENTS PAYABLE ACCT.	355.83	0.00	0.00	355.83
002.21800	INSURANCE PAYABLE/CCI	125,416.10	1,554.93	10,884.51	136,300.61
002.21803	EMPLOYEE HEALTH DEDUCTION	145.63	0.01CR	0.07CR	145.56
002.21804	RETIREMENT LOAN PAYABLE	197.64	0.00	0.00	197.64
002.21805	AMERICAN FIDELITY (PAYABLE)	56.22CR	0.00	0.02CR	56.24CR
002.21806	TEXAS LIFE PAYABLE	33.30CR	0.00	0.00	33.30CR
002.22200	DEFERRED REVENUES	13,374.00CR	0.00	0.00	13,374.00CR
	TOTAL CURRENT LIABILITIES:	52,047.70CR	0.01CR	20.09CR	52,067.79CR
	TOTAL LIABILITIES:	52,047.70CR	0.01CR	20.09CR	52,067.79CR
	FUND BALANCE:				
002.22000	REVENUE CONTROL ACCOUNT	0.00	454,313.60CR	1,514,169.00CR	1,514,169.00CR
002.23000	EXPENDITURE CONTROL ACCT.	0.00	192,238.15	1,319,225.48	1,319,225.48
002.27210	FUND BALANCE (APP)	34,587.71CR	0.00	0.00	34,587.71CR
002.28000	FUND BALANCE	218,852.24CR	0.00	0.00	218,852.24CR
	TOTAL FUND BALANCE:	253,439.95CR	262,075.45CR	194,943.52CR	448,383.47CR
	TOTAL LIABILITIES AND FUND BALANCE:	305,487.65CR	262,075.46CR	194,963.61CR	500,451.26CR
	TOTAL FUND:	0.00	0.00	0.00	0.00

----FUND---- 003 LODGING TAX TOURISM FUND

ACCOUNT		BEGINNING BALANCE	ACTUAL-THIS MONTH	ACTUAL-THIS YEAR	ENDING BALANCE
	ASSETS				
	CURRENT ASSETS:				
003.10200	CASH IN BANK	30,530.54	0.00	2,898.10	33,428.64
	TOTAL CURRENT ASSETS:	30,530.54	0.00	2,898.10	33,428.64
	TOTAL ASSETS:	30,530.54	0.00	2,898.10	33,428.64
	LIABILITIES AND FUND BALANCE				
	CURRENT LIABILITIES:				
003.20200	ACCOUNTS PAYABLE	2,000.45CR	0.00	0.00	2,000.45CR
	TOTAL CURRENT LIABILITIES:	2,000.45CR	0.00	0.00	2,000.45CR
	TOTAL LIABILITIES:	2,000.45CR	0.00	0.00	2,000.45CR
	FUND BALANCE:				
003.22000	REVENUE CONTROL ACCOUNT	0.00	0.00	31,148.66CR	31,148.66CR
003.23000	EXPENDITURE CONTROL ACCT.	0.00	0.00	28,250.56	28,250.56
003.28000	FUND BALANCE	28,530.09CR	0.00	0.00	28,530.09CR
	TOTAL FUND BALANCE:	28,530.09CR	0.00	2,898.10CR	31,428.19CR
	TOTAL LIABILITIES AND FUND BALANCE:	30,530.54CR	0.00	2,898.10CR	33,428.64CR
	TOTAL FUND:	0.00	0.00	0.00	0.00

----FUND---- 004 CAPITAL EXPENDITURE FUND

ACCOUNT		BEGINNING BALANCE	ACTUAL-THIS MONTH	ACTUAL-THIS YEAR	ENDING BALANCE
	ASSETS				
	CURRENT ASSETS:				
004.10200	CASH IN BANK	0.00	23,939.02CR	907,973.31	907,973.31
004.10485	CASH IN BANK ESCROW ACCOUNT	680,036.00	0.00	0.00	680,036.00
004.11100	GRANTS RECEIVABLE	1,629,822.65	0.00	0.00	1,629,822.65
	TOTAL CURRENT ASSETS:	2,309,858.65	23,939.02CR	907,973.31	3,217,831.96
	TOTAL ASSETS:	2,309,858.65	23,939.02CR	907,973.31	3,217,831.96
	LIABILITIES AND FUND BALANCE				
	CURRENT LIABILITIES:				
004.20200	ACCOUNTS PAYABLE	459,615.11CR	0.00	0.00	459,615.11CR
004.22200	DEFERRED REVENUES	0.09CR	0.00	0.00	0.09CR
	TOTAL CURRENT LIABILITIES:	459,615.20CR	0.00	0.00	459,615.20CR
	TOTAL LIABILITIES:	459,615.20CR	0.00	0.00	459,615.20CR
	FUND BALANCE:				
004.22000	REVENUE CONTROL ACCOUNT	0.00	105,899.61CR	2,217,383.59CR	2,217,383.59CR
004.23000	EXPENDITURE CONTROL ACCT.	0.00	129,838.63	1,309,410.28	1,309,410.28
004.28000	FUND BALANCE	1,850,243.45CR	0.00	0.00	1,850,243.45CR
	TOTAL FUND BALANCE:	1,850,243.45CR	23,939.02	907,973.31CR	2,758,216.76CR
	TOTAL LIABILITIES AND FUND BALANCE:	2,309,858.65CR	23,939.02	907,973.31CR	3,217,831.96CR
	TOTAL FUND:	0.00	0.00	0.00	0.00

----FUND---- 005 RETIREMENT FUND

ACCOUNT		BEGINNING BALANCE	ACTUAL-THIS MONTH	ACTUAL-THIS YEAR	ENDING BALANCE
	ASSETS				
	CURRENT ASSETS:				
005.10200	CASH IN BANK/TREASURER	112,689.98	7,456.18CR	47,567.38	160,257.36
005.10500	PROP. TAXES RECEIVABLE	113,400.00	0.00	0.00	113,400.00
	TOTAL CURRENT ASSETS:	226,089.98	7,456.18CR	47,567.38	273,657.36
	TOTAL ASSETS:	226,089.98	7,456.18CR	47,567.38	273,657.36
	LIABILITIES AND FUND BALANCE				
	CURRENT LIABILITIES:				
005.21796	RET/ACCT PAYABLE	1,479.03	0.00	1,428.67	2,907.70
005.22200	DEFERRED REVENUES	113,400.00CR	0.00	0.00	113,400.00CR
	TOTAL CURRENT LIABILITIES:	111,920.97CR	0.00	1,428.67	110,492.30CR
	TOTAL LIABILITIES:	111,920.97CR	0.00	1,428.67	110,492.30CR
	FUND BALANCE:				
005.22000	REVENUE CONTROL ACCOUNT	0.00	7,255.03CR	153,953.54CR	153,953.54CR
005.23000	EXPENDITURE CONTROL ACCT.	0.00	14,711.21	104,957.49	104,957.49
005.28000	FUND BALANCE	114,169.01CR	0.00	0.00	114,169.01CR
	TOTAL FUND BALANCE:	114,169.01CR	7,456.18	48,996.05CR	163,165.06CR
	TOTAL LIABILITIES AND FUND BALANCE:	226,089.98CR	7,456.18	47,567.38CR	273,657.36CR
	TOTAL FUND:	0.00	0.00	0.00	0.00

----FUND---- 050 CONSERVATION TRUST FUND

ACCOUNT		BEGINNING BALANCE	ACTUAL-THIS MONTH	ACTUAL-THIS YEAR	ENDING BALANCE
	ASSETS				
	CURRENT ASSETS:				
050.10200	CASH IN BANK/TREASURER	14,605.13	2,191.11CR	2,350.91	16,956.04
	TOTAL CURRENT ASSETS:	14,605.13	2,191.11CR	2,350.91	16,956.04
	TOTAL ASSETS:	14,605.13	2,191.11CR	2,350.91	16,956.04
	LIABILITIES AND FUND BALANCE				
	FUND BALANCE:				
050.22000	REVENUE CONTROL ACCOUNT	0.00	1.72CR	9,593.18CR	9,593.18CR
050.23000	EXPENDITURE CONTROL ACCT.	0.00	2,192.83	7,242.27	7,242.27
050.28000	FUND BALANCE	14,605.13CR	0.00	0.00	14,605.13CR
	TOTAL FUND BALANCE:	14,605.13CR	2,191.11	2,350.91CR	16,956.04CR
	TOTAL LIABILITIES AND FUND BALANCE:	14,605.13CR	2,191.11	2,350.91CR	16,956.04CR
	TOTAL FUND:	0.00	0.00	0.00	0.00

----FUND---- 051 P.I.L.T.

ACCOUNT		BEGINNING BALANCE	ACTUAL-THIS MONTH	ACTUAL-THIS YEAR	ENDING BALANCE
	ASSETS				
	CURRENT ASSETS:				
051.10200	CASH IN BANK/TREASURER	253,771.63	344,525.29CR	44,000.37CR	209,771.26
051.10600	DUE FROM OTHER FUNDS	703,764.94	0.00	0.00	703,764.94
	TOTAL CURRENT ASSETS:	957,536.57	344,525.29CR	44,000.37CR	913,536.20
	TOTAL ASSETS:	957,536.57	344,525.29CR	44,000.37CR	913,536.20
	LIABILITIES AND FUND BALANCE				
	FUND BALANCE:				
051.22000	REVENUE CONTROL ACCOUNT	0.00	14,710.29	563,953.00CR	563,953.00CR
051.23000	EXPENDITURE CONTROL ACCT.	0.00	329,815.00	607,953.37	607,953.37
051.28000	FUND BALANCE	957,536.57CR	0.00	0.00	957,536.57CR
	TOTAL FUND BALANCE:	957,536.57CR	344,525.29	44,000.37	913,536.20CR
	TOTAL LIABILITIES AND FUND BALANCE:	957,536.57CR	344,525.29	44,000.37	913,536.20CR
	TOTAL FUND:	0.00	0.00	0.00	0.00

----FUND---- 053 H/C AMBULANCE ENTERPRISE

ACCOUNT		BEGINNING BALANCE	ACTUAL-THIS MONTH	ACTUAL-THIS YEAR	ENDING BALANCE
LIABILITIES AND FUND BALANCE					
	FUND BALANCE:				
053.25000	CONTRIBUTED CAPITAL	73,768.00CR	0.00	0.00	73,768.00CR
053.28000	FUND BALANCE	73,768.00	0.00	0.00	73,768.00
	TOTAL FUND BALANCE:	0.00	0.00	0.00	0.00
TOTAL LIABILITIES AND FUND BALANCE:		0.00	0.00	0.00	0.00
	TOTAL FUND:	0.00	0.00	0.00	0.00

----FUND---- 061 EMERGENCY RESERVE FUND

ACCOUNT		BEGINNING BALANCE	ACTUAL-THIS MONTH	ACTUAL-THIS YEAR	ENDING BALANCE
	LIABILITIES AND FUND BALANCE				
	CURRENT LIABILITIES:				
061.20100	VOUCHERS PAYABLE	4,108.00CR	0.00	0.00	4,108.00CR
	TOTAL CURRENT LIABILITIES:	4,108.00CR	0.00	0.00	4,108.00CR
	TOTAL LIABILITIES:	4,108.00CR	0.00	0.00	4,108.00CR
	FUND BALANCE:				
061.28000	FUND BALANCE	4,108.00	0.00	0.00	4,108.00
	TOTAL FUND BALANCE:	4,108.00	0.00	0.00	4,108.00
	TOTAL LIABILITIES AND FUND BALANCE:	0.00	0.00	0.00	0.00
	TOTAL FUND:	0.00	0.00	0.00	0.00

----FUND---- 062 FEDERAL FOREST PROJECT FUND

ACCOUNT		BEGINNING BALANCE	ACTUAL-THIS MONTH	ACTUAL-THIS YEAR	ENDING BALANCE
	ASSETS				
	CURRENT ASSETS:				
062.10200	CASH IN BANK/TREASURER	41,966.17	3,382.50CR	12,229.30	54,195.47
	TOTAL CURRENT ASSETS:	41,966.17	3,382.50CR	12,229.30	54,195.47
	TOTAL ASSETS:	41,966.17	3,382.50CR	12,229.30	54,195.47
	LIABILITIES AND FUND BALANCE				
	FUND BALANCE:				
062.22000	REVENUE CONTROL ACCOUNT	0.00	0.00	16,324.30CR	16,324.30CR
062.23000	EXPENDITURE CONTROL ACCT.	0.00	3,382.50	4,095.00	4,095.00
062.28000	FUND BALANCE	41,966.17CR	0.00	0.00	41,966.17CR
	TOTAL FUND BALANCE:	41,966.17CR	3,382.50	12,229.30CR	54,195.47CR
	TOTAL LIABILITIES AND FUND BALANCE:	41,966.17CR	3,382.50	12,229.30CR	54,195.47CR
	TOTAL FUND:	0.00	0.00	0.00	0.00

----FUND---- 065 CORRECTIONAL/FAC ENTERPRISE

ACCOUNT		BEGINNING BALANCE	ACTUAL-THIS MONTH	ACTUAL-THIS YEAR	ENDING BALANCE
	ASSETS				
	CURRENT ASSETS:				
065.10200	CASH IN BANK/TREASURER	11,021.07	0.84	5.95	11,027.02
065.16420	EQUIPMENT & FIXTURES	274,052.25	0.00	0.00	274,052.25
065.16900	ACC. DEPRECIATION	246,314.00CR	0.00	0.00	246,314.00CR
	TOTAL CURRENT ASSETS:	38,759.32	0.84	5.95	38,765.27
	TOTAL ASSETS:	38,759.32	0.84	5.95	38,765.27
	LIABILITIES AND FUND BALANCE				
	FUND BALANCE:				
065.22000	REVENUE CONTROL ACCOUNT	0.00	0.84CR	5.95CR	5.95CR
065.28000	FUND BALANCE	38,759.32CR	0.00	0.00	38,759.32CR
	TOTAL FUND BALANCE:	38,759.32CR	0.84CR	5.95CR	38,765.27CR
	TOTAL LIABILITIES AND FUND BALANCE:	38,759.32CR	0.84CR	5.95CR	38,765.27CR
	TOTAL FUND:	0.00	0.00	0.00	0.00

----FUND---- 066 PUBLIC WELFARE FUND

ACCOUNT		BEGINNING BALANCE	ACTUAL-THIS MONTH	ACTUAL-THIS YEAR	ENDING BALANCE
	ASSETS				
	CURRENT ASSETS:				
066.10200	CASH IN BANK/TREASURER	17,079,915.86CR	122,294.22CR	866,667.07CR	17,946,582.93CR
	TOTAL CURRENT ASSETS:	17,079,915.86CR	122,294.22CR	866,667.07CR	17,946,582.93CR
	TOTAL ASSETS:	17,079,915.86CR	122,294.22CR	866,667.07CR	17,946,582.93CR
	LIABILITIES AND FUND BALANCE				
	CURRENT LIABILITIES:				
066.21710	STATE WITHHOLDING PAYABLE	140.00	0.00	0.00	140.00
066.21791	INSURANCE PAYABLE (DEN/VIS)	135,849.95CR	1,240.05CR	9,835.00CR	145,684.95CR
066.21792	INSURANCE PAYABLE/EQUIT	11.00	0.00	0.00	11.00
066.21793	INSURANCE PAYABLE/COL	35.40	0.00	0.00	35.40
066.21796	RETIREMENT PAYABLE ACCT.	20,659.70	0.00	1,428.67	22,088.37
066.21798	JUDGEMENTS PAYABLE ACCT.	0.01CR	0.00	0.00	0.01CR
066.21800	INSURANCE PAYABLE/CCI	134,584.11	1,240.05	10,527.30	145,111.41
066.21801	SUPPLEMENTAL INSURANCE/CCI	73.51	0.00	47.00	120.51
066.21803	EMPLOYEE HEALTH DEDUCTION	2,620.47	0.01CR	114.99	2,735.46
066.21806	TEXAS LIFE PAYABLE	0.01CR	6.11	6.10	6.09
	TOTAL CURRENT LIABILITIES:	22,274.22	6.10	2,289.06	24,563.28
	TOTAL LIABILITIES:	22,274.22	6.10	2,289.06	24,563.28
	FUND BALANCE:				
066.23000	EXPENDITURE CONTROL ACCT.	0.00	122,288.12	864,378.01	864,378.01
066.28000	FUND BALANCE	17,057,641.64	0.00	0.00	17,057,641.64
	TOTAL FUND BALANCE:	17,057,641.64	122,288.12	864,378.01	17,922,019.65
	TOTAL LIABILITIES AND FUND BALANCE:	17,079,915.86	122,294.22	866,667.07	17,946,582.93
	TOTAL FUND:	0.00	0.00	0.00	0.00

----FUND---- 068 WTS ENTERPRISE 0095.9100

ACCOUNT		BEGINNING BALANCE	ACTUAL-THIS MONTH	ACTUAL-THIS YEAR	ENDING BALANCE
	ASSETS				
	CURRENT ASSETS:				
068.10200	CASH IN BANK/TREASURER	54,067.85	367.70CR	3,446.82	57,514.67
	TOTAL CURRENT ASSETS:	54,067.85	367.70CR	3,446.82	57,514.67
	TOTAL ASSETS:	54,067.85	367.70CR	3,446.82	57,514.67
	LIABILITIES AND FUND BALANCE				
	CURRENT LIABILITIES:				
068.20200	ACCOUNTS PAYABLE	3,504.52CR	0.00	0.00	3,504.52CR
068.21791	INSURANCE PAYABLE (DEN/VIS)	2,395.18CR	0.00	0.00	2,395.18CR
068.21800	INSURANCE PAYABLE/CCI	3,587.63	0.00	0.00	3,587.63
068.21803	EMPLOYEE HEALTH DEDUCTION	4.17	0.00	0.00	4.17
068.21805	AMERICAN FIDELITY (PAYABLE)	20.28	0.00	0.00	20.28
	TOTAL CURRENT LIABILITIES:	2,287.62CR	0.00	0.00	2,287.62CR
	TOTAL LIABILITIES:	2,287.62CR	0.00	0.00	2,287.62CR
	FUND BALANCE:				
068.22000	REVENUE CONTROL ACCOUNT	0.00	9,702.61CR	52,286.94CR	52,286.94CR
068.23000	EXPENDITURE CONTROL ACCT.	0.00	10,070.31	48,840.12	48,840.12
068.28000	FUND BALANCE	51,780.23CR	0.00	0.00	51,780.23CR
	TOTAL FUND BALANCE:	51,780.23CR	367.70	3,446.82CR	55,227.05CR
	TOTAL LIABILITIES AND FUND BALANCE:	54,067.85CR	367.70	3,446.82CR	57,514.67CR
	TOTAL FUND:	0.00	0.00	0.00	0.00

----FUND---- 069 EMERG/SERVICE FUND 0028.9100

ACCOUNT		BEGINNING BALANCE	ACTUAL-THIS MONTH	ACTUAL-THIS YEAR	ENDING BALANCE
	ASSETS				
	CURRENT ASSETS:				
069.10200	CASH IN BANK/TREASURER	918,809.83	36,301.17	252,268.05CR	666,541.78
069.10600	DUE FROM OTHER FUNDS	22,500.00	0.00	0.00	22,500.00
069.10700	SALES TAX RECEIVABLE	142,473.07	0.00	0.00	142,473.07
	TOTAL CURRENT ASSETS:	1,083,782.90	36,301.17	252,268.05CR	831,514.85
	TOTAL ASSETS:	1,083,782.90	36,301.17	252,268.05CR	831,514.85
	LIABILITIES AND FUND BALANCE				
	CURRENT LIABILITIES:				
069.20200	ACCOUNTS PAYABLE	278.93CR	0.00	0.00	278.93CR
069.21791	INSURANCE PAYABLE (DEN/VIS)	39,892.11CR	532.81CR	3,636.46CR	43,528.57CR
069.21796	RETIREMENT PAYABLE ACCT.	4.37	0.00	0.00	4.37
069.21798	JUDGEMENTS PAYABLE ACCT.	277.72	0.00	0.00	277.72
069.21800	INSURANCE PAYABLE/CCI	35,128.74	532.82	2,332.19	37,460.93
069.21801	SUPPLEMENTAL INSURANCE	94.62	0.00	70.50CR	24.12
069.21803	EMPLOYEE HEALTH DEDUCTION	1,828.77CR	0.00	282.00CR	2,110.77CR
069.21805	AMERICAN FIDELITY (PAYABLE)	55.39	0.00	70.31	125.70
069.21806	TEXAS LIFE PAYABLE	22.69	0.00	0.00	22.69
	TOTAL CURRENT LIABILITIES:	6,416.28CR	0.01	1,586.46CR	8,002.74CR
	TOTAL LIABILITIES:	6,416.28CR	0.01	1,586.46CR	8,002.74CR
	FUND BALANCE:				
069.22000	REVENUE CONTROL ACCOUNT	0.00	100,128.87CR	569,651.69CR	569,651.69CR
069.23000	EXPENDITURE CONTROL ACCT.	0.00	63,827.69	823,506.20	823,506.20
069.28000	FUND BALANCE	1,077,366.62CR	0.00	0.00	1,077,366.62CR
	TOTAL FUND BALANCE:	1,077,366.62CR	36,301.18CR	253,854.51	823,512.11CR
	TOTAL LIABILITIES AND FUND BALANCE:	1,083,782.90CR	36,301.17CR	252,268.05	831,514.85CR
	TOTAL FUND:	0.00	0.00	0.00	0.00

----FUND---- 070 GARDNER PUBLIC IMP DISTRICT

ACCOUNT		BEGINNING BALANCE	ACTUAL-THIS MONTH	ACTUAL-THIS YEAR	ENDING BALANCE
	ASSETS				
	CURRENT ASSETS:				
070.10200	CASH IN BANK/TREASURER	21,077.43	4,462.16CR	4,233.09CR	16,844.34
070.11500	ACCOUNTS RECEIVABLE	4,775.87	0.00	0.00	4,775.87
070.16420	EQUIPMENT & FIXTURES	348,801.41	0.00	0.00	348,801.41
070.16900	ACC. DEPRECIATION	427,690.00CR	0.00	0.00	427,690.00CR
	TOTAL CURRENT ASSETS:	53,035.29CR	4,462.16CR	4,233.09CR	57,268.38CR
	FIXED ASSETS:				
070.16950	WASTEWATER DISTRIB SYSTEM	943,029.01	0.00	0.00	943,029.01
070.16960	WATER DISTRIBUTION SYSTEM	595,107.97	0.00	0.00	595,107.97
	TOTAL FIXED ASSETS:	1,538,136.98	0.00	0.00	1,538,136.98
	TOTAL ASSETS:	1,485,101.69	4,462.16CR	4,233.09CR	1,480,868.60
	LIABILITIES AND FUND BALANCE				
	CURRENT LIABILITIES:				
070.20200	ACCOUNTS PAYABLE	5,552.88CR	0.00	0.00	5,552.88CR
070.21791	INSURANCE PAYABLE (DEN/VIS)	1,781.12CR	38.72CR	271.04CR	2,052.16CR
070.21800	INSURANCE PAYABLE/CCI	1,781.31	38.72	271.04	2,052.35
070.21803	EMPLOYEE HEALTH DEDUCTION	0.10	0.01	0.07	0.17
070.21805	AMERICAN FIDELITY (PAYABLE)	35.94	0.00	0.03	35.97
070.21806	TEXAS LIFE PAYABLE	33.30	0.00	0.00	33.30
	TOTAL CURRENT LIABILITIES:	5,483.35CR	0.01	0.10	5,483.25CR
	TOTAL LIABILITIES:	5,483.35CR	0.01	0.10	5,483.25CR
	FUND BALANCE:				
070.22000	REVENUE CONTROL ACCOUNT	0.00	15,326.08CR	64,516.96CR	64,516.96CR
070.23000	EXPENDITURE CONTROL ACCT.	0.00	19,788.23	68,749.95	68,749.95
070.28000	FUND BALANCE	1,479,618.34CR	0.00	0.00	1,479,618.34CR
	TOTAL FUND BALANCE:	1,479,618.34CR	4,462.15	4,232.99	1,475,385.35CR
	TOTAL LIABILITIES AND FUND BALANCE:	1,485,101.69CR	4,462.16	4,233.09	1,480,868.60CR
	TOTAL FUND:	0.00	0.00	0.00	0.00

----FUND---- 071 DISASTER RECOVERY FUND

ACCOUNT		BEGINNING BALANCE	ACTUAL-THIS MONTH	ACTUAL-THIS YEAR	ENDING BALANCE
	ASSETS				
	CURRENT ASSETS:				
071.10200	CASH IN BANK	462,557.21	14,710.29	211,272.43	673,829.64
071.11100	GRANTS RECEIVABLE	95,245.61	0.00	0.00	95,245.61
	TOTAL CURRENT ASSETS:	557,802.82	14,710.29	211,272.43	769,075.25
	TOTAL ASSETS:	557,802.82	14,710.29	211,272.43	769,075.25
	LIABILITIES AND FUND BALANCE				
	CURRENT LIABILITIES:				
071.24500	DUE TO OTHER FUNDS	703,764.94CR	0.00	0.00	703,764.94CR
	TOTAL CURRENT LIABILITIES:	703,764.94CR	0.00	0.00	703,764.94CR
	TOTAL LIABILITIES:	703,764.94CR	0.00	0.00	703,764.94CR
	FUND BALANCE:				
071.22000	REVENUE CONTROL ACCOUNT	0.00	14,710.29CR	911,183.40CR	911,183.40CR
071.23000	EXPENDITURE CONTROL ACCT.	0.00	0.00	699,910.97	699,910.97
071.28000	FUND BALANCE	145,962.12	0.00	0.00	145,962.12
	TOTAL FUND BALANCE:	145,962.12	14,710.29CR	211,272.43CR	65,310.31CR
	TOTAL LIABILITIES AND FUND BALANCE:	557,802.82CR	14,710.29CR	211,272.43CR	769,075.25CR
	TOTAL FUND:	0.00	0.00	0.00	0.00

TOTAL NUMBER OF RECORDS PRINTED 147

THE PRECEDING BALANCE SHEET WAS REVIEWED AND APPROVED.

DATE _____ APPROVED BY _____

_____

_____

Report Selection:

Inclusions Ranges: Begin (thru) End
Fund & Account...

Approval Plan..... ____ thru ____

Calendar Start Date..... 01 01 2021
Calendar End (As Of) Date..... 07 31 2021

Lowest Level to Print..... 3 . 0 (1.0 to 5.0)
Level to Page Break..... 1 . 0 (1.0 to 5.0)

MTD or QTD (M/Q)..... M

Print Inactive Accounts Too?..... N (Y/N)
Exclude Accounts with Zero Dollars. Y (Y/N)
(A)nnual Budget or (Y)ear-to-Date.. A (A/Y)
Open Download File in Excel..... N (Y/N)

Run Instructions:

Jobq	Banner	Copies	Form	Printer	Hold	Space	LPI	Lines	CPI	CP	SP	RT
L		01		COHUPRT14	Y	S	6	066	10			

Revenue Guideline
FOR THE PERIOD(S) JAN 01, 2021 THROUGH JUL 31, 2021

		ADOPTED BUDGET	REVISED ANNUAL BUDGET	ACT MTD POSTED AND IN PROCESS	ACT YTD POSTED AND IN PROCESS	REMAINING BALANCE	PCT	
001	GENERAL FUND							
30	REVENUE							
5000	PROPERTY TAX	2,297,756.00	2,297,756.00	56,028.36	2,156,894.11	140,861.89	93	---------
6001	DEL/PERS B TAX APP	17,250.00	17,250.00	45.86	4,298.51	12,951.49	24	--
6003	BACK TAX INT. APP.	1,500.00	1,500.00	3.21	1,357.01	142.99	90	---------
6004	CURRENT INT. APP.	3,250.00	3,250.00	1,332.51	1,903.55	1,346.45	58	-----
6006	SPEC. OWNERSHIP A	94,169.00	94,169.00	7,552.51	68,610.62	25,558.38	72	-------
6007	SPEC. OWNERSHIP B	139,883.00	139,883.00	12,826.94	88,863.57	51,019.43	63	------
6008	BIA & LATE FILINGS	500.00	500.00	0.00	0.00	500.00	0	
7001	SALES TAX	390,450.00	390,450.00	41,098.12	281,026.57	109,423.43	71	-------
7002	VETERANS OFFICE	14,700.00	14,700.00	0.00	6,901.00	7,799.00	46	----
7003	SHERIFF'S FEES	4,744.00	4,744.00	45.00	1,844.64	2,899.36	38	---
7004	DIST. COURT FEES	1,750.00	1,750.00	60.86	1,164.55	585.45	66	------
7005	EXCESS FEES	182,184.00	182,184.00	17,455.47	118,938.06	63,245.94	65	------
7006	DOCUMENTARY FEE	7,250.00	7,250.00	2,499.51	11,377.29	4,127.29-	156	----------!!!!
7007	P&Z BLDG. PERMITS	160,000.00	160,000.00	8,250.42	95,234.35	64,765.65	59	-----
7010	CONTRACTOR LIC.	5,000.00	5,000.00	200.00	18,075.00	13,075.00-	361	----------!!!!
7012	LAND USE FEES	39,500.00	39,500.00	11,900.00	33,576.50	5,923.50	85	--------
7013	CIGARETTE TAX	1,050.00	1,050.00	119.43	832.78	217.22	79	-------
7015	XEROX COPIES	100.00	100.00	3.00	137.75	37.75-	137	----------!!!
7016	COMM. CNTR. WLSBG.	1,500.00	1,500.00	1,000.00	1,300.00	200.00	86	--------
7017	ADVERTISING	600.00	600.00	10.00	180.00	420.00	30	---
7018	RENT	500.00	500.00	0.00	0.00	500.00	0	
7020	CONCESSIONS	60.00	60.00	0.00	0.00	60.00	0	
7022	CERTIF. OF TAX DUE	8,500.00	8,500.00	1,200.00	7,980.00	520.00	93	---------
7024	TRASH PERMITS	120.00	120.00	0.00	0.00	120.00	0	
7026	WILDLIFE (HB 1331)	80.00	80.00	91.50	91.50	11.50-	114	----------!
7027	PARKS & RECREATION (HB1331)	160.00	160.00	198.95	198.95	38.95-	124	----------!!
7030	OTHER REFUNDS	15,000.00	15,000.00	40,465.89	90,407.00	75,407.00-	602	----------!!!!
7031	FUEL SALES (AIRPORT)	116,813.00	116,813.00	13,452.99	51,608.00	65,205.00	44	----
7035	BONUS OF TAX SALES	12,000.00	12,000.00	0.00	0.00	12,000.00	0	
7037	HOUSING AUTHORITY	2,800.00	2,800.00	0.00	5,982.60	3,182.60-	213	----------!!!!
7038	SALE OF ASSETS	3,000.00	3,000.00	0.00	0.00	3,000.00	0	
7039	LIQUOR LICENSES	1,100.00	1,100.00	0.00	975.00	125.00	88	--------
7062	SPECIAL ASSESSMENT TO COUNTY	200.00	200.00	1,185.07	5,854.11	5,654.11-	2927	----------!!!!
7080	TREASURER FEE	178,500.00	178,500.00	9,393.79	147,186.94	31,313.06	82	--------
7082	SERVICE CHARGE	800.00	800.00	137.29	1,886.09	1,086.09-	235	----------!!!!
7084	COMM. CNTR. GARDNER	2,000.00	2,000.00	500.00	1,130.00	870.00	56	-----
7089	AIRCRAFT FEES	2,600.00	2,600.00	0.00	2,932.00	332.00-	112	----------!
7093	HOUSING INMATES	0.00	0.00	0.00	14,666.41	14,666.41-	9999	----------!!!!
7102	TELE. COMMISSION	3,000.00	3,000.00	0.00	1,982.49	1,017.51	66	------
7123	TRANS. MOTOR VEH REFUND	0.00	0.00	0.00	300.00	300.00-	9999	----------!!!!
7129	CLERK (MAPS)	750.00	750.00	30.00	1,598.80	848.80-	213	----------!!!!
7134	AIRPORT REIMBURSEMENT	0.00	0.00	20.00	20.00	20.00-	9999	----------!!!!
7135	TAX REFUND	1,500.00	1,500.00	0.00	1,219.51	280.49	81	--------
7146	DUI/DRUG REIMBURSEMENT	1,100.00	1,100.00	0.00	1,215.13	115.13-	110	----------!
7152	ABATEMENT (RECOUP)	6,838.00	6,838.00	176.11	6,782.37	55.63	99	---------

		ADOPTED BUDGET	REVISED BUDGET	ANNUAL ACT MTD POSTED AND IN PROCESS	ANNUAL ACT YTD POSTED AND IN PROCESS	REMAINING BALANCE	PCT	
001	GENERAL FUND							
30	REVENUE							
7153	ABATEMENT (RECOUP) INTEREST	60.00	60.00	4.20	5.99	54.01	9	
7160	TREASURER CASH LONG	0.00	0.00	5.24	9.10	9.10-	9999	----------!!!!
7162	INSUFFICIENT RECOVERY FUND	1,650.00	1,650.00	0.00	2,500.00	850.00-	151	----------!!!!
7164	MISC/RECEIPT	1,050.00	1,050.00	0.00	1,100.00	50.00-	104	----------
7167	TREAS/DEED APPLICATION FEE	23,000.00	23,000.00	489.94	8,241.76	14,758.24	35	---
7168	COUNTY ASSESSOR/XEROX COPIES	2,200.00	2,200.00	12.55	929.15	1,270.85	42	----
7169	SHERIFF/DETENTION GRANTS	0.00	0.00	24,944.50	24,944.50	24,944.50-	9999	----------!!!!
7173	SAMPSON FUND	0.00	0.00	0.00	2,971.65	2,971.65-	9999	----------!!!!
7174	DELINQUENT ABATEMENT TAX	113.00	113.00	0.34	72.19	40.81	63	------
7175	DELINQUENT ABATEMENT INT	12.00	12.00	0.02	20.47	8.47-	170	----------!!!!
7177	TAX SALE LISTING BUYER FEE	10.00	10.00	0.00	0.00	10.00	0	
7178	TD 1000 NON-FILING PENALTY	100.00	100.00	0.00	0.00	100.00	0	
7179	COMMISSARY-SHERIFF	6,250.00	6,250.00	0.00	3,909.12	2,340.88	62	------
7181	CO-CLERK/NO PROOF OF INS	3,000.00	3,000.00	140.75	564.05	2,435.95	18	-
7185	ELECTION REIMBURSEMENT	15,000.00	15,000.00	0.00	21,000.67	6,000.67-	140	----------!!!!
7190	INMATE FEES	900.00	900.00	0.00	1,221.05	321.05-	135	----------!!!
7207	CO CLERK VEH/REG LATE FEE	9,250.00	9,250.00	1,060.00	7,690.00	1,560.00	83	--------
8000	INTEREST EARNED	28,500.00	28,500.00	466.52	3,499.16	25,000.84	12	-
9055	GIS DATA	1,000.00	1,000.00	0.00	0.00	1,000.00	0	
9070	COURT SECURITY GRANT REIMBUR	39,619.00	39,619.00	1,464.69	26,413.61	13,205.39	66	------
9083	EMERG/SERVICE FEE COLLECTED	0.00	0.00	0.00	128.00	128.00-	9999	----------!!!!
9089	TRANS/FROM EMER RESERVE FUND	150,000.00	150,000.00	0.00	0.00	150,000.00	0	
9094	TOWER RENT	16,100.00	16,100.00	1,350.00	9,350.00	6,750.00	58	-----
9209	PUBLIC TRUSTEE REIMBURSEMENT	12,500.00	12,500.00	0.00	4,000.00	8,500.00	32	---
9222	MARIJUANA EXCISE TAX	185,000.00	185,000.00	32,379.52	253,434.66	68,434.66-	136	----------!!!
9226	REGIONAL BUILDING AUTHORITY	8,000.00	8,000.00	0.00	0.00	8,000.00	0	
9247	CITY OF WALSENBURG (POLICE)	750,712.00	750,712.00	59,488.00	416,416.00	334,296.00	55	-----
9253	COLLECTIONS (SPRHC)	0.00	0.00	0.00	25.10	25.10-	9999	----------!!!!
9259	GBMJ 17 014 PAYMENT	5,000.00	5,000.00	0.00	0.00	5,000.00	0	
9275	RENTAL DEP. CUCHARA MTN PARK	500.00	500.00	0.00	900.00	400.00-	180	----------!!!!
9276	NOTARY FEES	300.00	300.00	45.00	230.00	70.00	76	-------
9277	MARIJUANA EXISE TAX (OTHER)	0.00	0.00	1,673.12	1,673.12	1,673.12-	9999	----------!!!!
9285	DISASTER REC MANAGER GRANT	37,500.00	37,500.00	0.00	13,948.12	23,551.88	37	---
9292	JUDICIAL CENTER SALES TAX	802,782.00	802,782.00	77,953.80	766,981.76	35,800.24	95	---------
9309	COLO AERONAUTICS REIMBURSEME	0.00	0.00	0.00	5,512.50	5,512.50-	9999	----------!!!!
9311	CARES AIRPORT GRANT	0.00	0.00	0.00	19,500.00	19,500.00-	9999	----------!!!!
9321	CARES ELECTION JUDGE	0.00	0.00	0.00	1,389.32	1,389.32-	9999	----------!!!!
TOTAL:	REVENUE	5,820,665.00	5,820,665.00	428,760.98	4,835,113.81	985,551.19	83	--------
TOTAL:	GENERAL FUND	5,820,665.00	5,820,665.00	428,760.98	4,835,113.81	985,551.19	83	--------

		ADOPTED BUDGET	REVISED BUDGET	ANNUAL ACT MTD POSTED AND IN PROCESS	ANNUAL ACT YTD POSTED AND IN PROCESS	REMAINING BALANCE	PCT	
002	ROAD & BRIDGE FUND							
30	REVENUE							
5000	PROPERTY TAX	13,374.00	13,374.00	266.03	11,124.18	2,249.82	83	--------
6001	DEL/PERS B TAX APP	65.00	65.00	0.13	15.39	49.61	23	--
6003	BACK TAX INT. APP.	5.00	5.00	0.02	7.89	2.89-	157	----------!!!!
6004	CURRENT INT. APP.	22.00	22.00	7.77	11.08	10.92	50	-----
6006	SPEC. OWNERSHIP A	610.00	610.00	43.80	397.97	212.03	65	------
6007	SPEC. OWNERSHIP B	860.00	860.00	74.40	515.42	344.58	59	-----
7030	OTHER REFUNDS	0.00	0.00	0.00	1,459.19	1,459.19-	9999	----------!!!!
7037	HOUSING AUTHORITY	32.00	32.00	0.00	34.75	2.75-	108	----------
7047	TRANSFER:FROM PILT FUND	600,000.00	600,000.00	300,000.00	500,000.00	100,000.00	83	--------
7060	TAYLOR GRAZING	600.00	600.00	0.00	1,629.50	1,029.50-	271	----------!!!!
7070	GAS REIMBURSEMENTS	151,000.00	151,000.00	12,367.51	59,056.31	91,943.69	39	---
7072	R & B PERMITS	11,200.00	11,200.00	350.00	4,700.00	6,500.00	41	----
7090	MOTOR VEHICLE LIC.	19,750.00	19,750.00	1,958.18	12,033.11	7,716.89	60	------
7100	HIGHWAY USERS TAX	1,645,000.00	1,645,000.00	130,717.98	859,477.18	785,522.82	52	-----
7166	VEHICLE SERVICE	55,000.00	55,000.00	6,466.57	14,963.32	40,036.68	27	--
9081	SRS PAYMENT	15,000.00	15,000.00	0.00	23,126.10	8,126.10-	154	----------!!!!
9093	TRAN/FROM GARDNER PID	6,000.00	6,000.00	0.00	0.00	6,000.00	0	
9205	CURRENT TAX COUNTY R&B/WLSBG	1,044.00	1,044.00	28.55	1,060.85	16.85-	101	----------
9206	CURRENT TAX CO R&B/LAVETA	392.00	392.00	32.53	399.39	7.39-	101	----------
9207	DEL TAX CO R&B/WALSENBURG	10.00	10.00	0.13	8.60	1.40	86	--------
9208	DEL TAX CO R&B/LAVETA	0.00	0.00	0.00	1.00	1.00-	9999	----------!!!!
9237	CATTLE GUARD SALES	500.00	500.00	0.00	0.00	500.00	0	
9278	2018/19 CDA NOXIOUS WEED GRA	0.00	0.00	0.00	9,500.00	9,500.00-	9999	----------!!!!
9294	BLM NOXIOUS WEED GRANT	0.00	0.00	0.00	6,127.67	6,127.67-	9999	----------!!!!
9305	IGA NOXIOUS WEED (CUSTER)	7,053.00	7,053.00	0.00	6,520.10	532.90	92	---------
9331	2021 COST SHARE PRGRM NOX WD	0.00	0.00	2,000.00	2,000.00	2,000.00-	9999	----------!!!!
TOTAL:	REVENUE	2,527,517.00	2,527,517.00	454,313.60	1,514,169.00	1,013,348.00	59	-----
TOTAL:	ROAD & BRIDGE FUND	2,527,517.00	2,527,517.00	454,313.60	1,514,169.00	1,013,348.00	59	-----

Revenue Guideline
FOR THE PERIOD(S) JAN 01, 2021 THROUGH JUL 31, 2021

		ADOPTED BUDGET	REVISED ANNUAL BUDGET	ACT MTD POSTED AND IN PROCESS	ACT YTD POSTED AND IN PROCESS	REMAINING BALANCE	PCT	
003	LODGING TAX TOURISM FUND							
30	REVENUE							
7197	LODGING TAX	50,000.00	50,000.00	0.00	28,505.66	21,494.34	57	-----
9291	SHF WALKING TOUR GRANT	0.00	0.00	0.00	2,643.00	2,643.00-	9999	----------!!!!
TOTAL:	REVENUE	50,000.00	50,000.00	0.00	31,148.66	18,851.34	62	------
TOTAL:	LODGING TAX TOURISM FUND	50,000.00	50,000.00	0.00	31,148.66	18,851.34	62	------

		ADOPTED BUDGET	REVISED BUDGET	ANNUAL ACT MTD POSTED AND IN PROCESS	ACT YTD POSTED AND IN PROCESS	REMAINING BALANCE	PCT	
004	SPECIAL PROJECT FUND							
30	REVENUE							
7047	TRANSFER: P.I.L.T.	50,000.00	50,000.00	0.00	0.00	50,000.00	0	
9061	EMERG/COMMUNICATION UPGRADE	0.00	0.00	0.00	6,632.68	6,632.68-	9999	----------!!!!
9074	COG HOUSING GRANT	250,000.00	250,000.00	0.00	0.00	250,000.00	0	
9080	TRANS FROM EMER/SERVICES	0.00	0.00	0.00	400,000.00	400,000.00-	9999	----------!!!!
9217	STATE HISTORICAL GRANT	200,000.00	200,000.00	0.00	0.00	200,000.00	0	
9218	COURTHOUSE REHAB PHASE 1	200,000.00	200,000.00	7,008.08	24,556.58	175,443.42	12	-
9246	NEW JUDICIAL BLDG PHASE II	0.00	0.00	3,184.00	3,184.00	3,184.00-	9999	----------!!!!
9267	CUCHARA MOUNTAIN PARK GRANT	228,102.00	228,102.00	0.00	0.00	228,102.00	0	
9298	HC JUDICIAL CENTER (UNDER)	0.00	0.00	0.00	1,629,822.65	1,629,822.65-	9999	----------!!!!
9299	HC JUDICIAL CENTER(STATE)	400,000.00	400,000.00	0.00	0.00	400,000.00	0	
9313	JAIL MOD/WALKWAY GRANT	0.00	0.00	80,226.03	137,706.18	137,706.18-	9999	----------!!!!
9318	FOX THEATRE WLSBG CAP IMP PR	400,000.00	400,000.00	0.00	0.00	400,000.00	0	
9319	RETAIL SECTOR PARTNERSHIP GR	75,000.00	75,000.00	0.00	0.00	75,000.00	0	
9325	EMG SERVICE DISPATCH GRANT	0.00	0.00	15,481.50	15,481.50	15,481.50-	9999	----------!!!!
TOTAL:	REVENUE	1,803,102.00	1,803,102.00	105,899.61	2,217,383.59	414,281.59-	122	----------!!
TOTAL:	SPECIAL PROJECT FUND	1,803,102.00	1,803,102.00	105,899.61	2,217,383.59	414,281.59-	122	----------!!

		ADOPTED BUDGET	REVISED BUDGET	ANNUAL ACT MTD POSTED AND IN PROCESS	ANNUAL ACT YTD POSTED AND IN PROCESS	REMAINING BALANCE	PCT	
005	RETIREMENT FUND							
30	REVENUE							
5000	PROPERTY TAX	113,400.00	113,400.00	2,938.48	113,122.20	277.80	99	---------
6001	DEL/PERS B TAX APP	210.00	210.00	2.41	225.47	15.47-	107	----------
6003	BACK TAX INT. APP.	42.00	42.00	0.17	71.16	29.16-	169	----------!!!!
6004	CURRENT INT. APP.	142.00	142.00	69.89	99.82	42.18	70	-------
6006	SPEC. OWNERSHIP A	5,450.00	5,450.00	393.76	3,577.12	1,872.88	65	------
6007	SPEC. OWNERSHIP B	7,700.00	7,700.00	668.75	4,633.02	3,066.98	60	------
7037	HOUSING AUTHORITY	250.00	250.00	0.00	312.79	62.79-	125	----------!!
7040	SOCIAL SERV. SHARE	35,650.00	35,650.00	3,181.57	23,483.29	12,166.71	65	------
9256	FORFEITURES	0.00	0.00	0.00	8,428.67	8,428.67-	9999	----------!!!!
TOTAL:	REVENUE	162,844.00	162,844.00	7,255.03	153,953.54	8,890.46	94	---------
TOTAL:	RETIREMENT FUND	162,844.00	162,844.00	7,255.03	153,953.54	8,890.46	94	---------

Revenue Guideline
FOR THE PERIOD(S) JAN 01, 2021 THROUGH JUL 31, 2021

		ADOPTED BUDGET	REVISED ANNUAL BUDGET	ACT MTD POSTED AND IN PROCESS	ACT YTD POSTED AND IN PROCESS	REMAINING BALANCE	PCT
050	CONSERVATION TRUST FUND						
30	REVENUE						
8000	INTEREST EARNED	32.00	32.00	1.72	10.03	21.97	31 ---
9001	COLORADO LOTTERY	11,444.00	11,444.00	0.00	9,583.15	1,860.85	83 --------
TOTAL:	REVENUE	11,476.00	11,476.00	1.72	9,593.18	1,882.82	83 --------
TOTAL:	CONSERVATION TRUST FUND	11,476.00	11,476.00	1.72	9,593.18	1,882.82	83 --------

		ADOPTED BUDGET	REVISED BUDGET	ANNUAL ACT MTD POSTED AND IN PROCESS	ANNUAL ACT YTD POSTED AND IN PROCESS	REMAINING BALANCE	PCT	
051	P.I.L.T.							
30	REVENUE							
7030	OTHER REFUNDS	0.00	0.00	14,710.29-	9,980.00	9,980.00-	9999	----------!!!!
9045	P.I.L.T.	535,000.00	535,000.00	0.00	0.00	535,000.00	0	
9322	TSFR FROM DISASTER REC FUND	553,973.00	553,973.00	0.00	553,973.00	0.00	100	----------
TOTAL:	REVENUE	1,088,973.00	1,088,973.00	14,710.29-	563,953.00	525,020.00	51	-----
TOTAL:	P.I.L.T.	1,088,973.00	1,088,973.00	14,710.29-	563,953.00	525,020.00	51	-----

	ADOPTED BUDGET	REVISED BUDGET	ANNUAL ACT MTD POSTED AND IN PROCESS	ANNUAL ACT YTD POSTED AND IN PROCESS	REMAINING BALANCE	PCT
062 FEDERAL FOREST PROJECT FUND						
30 REVENUE						
9072 FEDERAL FOREST PAYMENT	15,000.00	15,000.00	0.00	16,324.30	1,324.30-	108 ----------
TOTAL: REVENUE	15,000.00	15,000.00	0.00	16,324.30	1,324.30-	108 ----------
TOTAL: FEDERAL FOREST PROJECT FUND	15,000.00	15,000.00	0.00	16,324.30	1,324.30-	108 ----------

		ADOPTED BUDGET	REVISED BUDGET	ANNUAL ACT MTD POSTED AND IN PROCESS	ANNUAL ACT YTD POSTED AND IN PROCESS	REMAINING BALANCE	PCT
065	CORRECTIONAL/FAC ENTERPRISE						
30	REVENUE						
8000	INTEREST EARNED	13.00	13.00	0.84	5.95	7.05	45 ----
TOTAL:	REVENUE	13.00	13.00	0.84	5.95	7.05	45 ----
TOTAL:	CORRECTIONAL/FAC ENTERPRISE	13.00	13.00	0.84	5.95	7.05	45 ----

		ADOPTED BUDGET	REVISED ANNUAL BUDGET	ACT MTD POSTED AND IN PROCESS	ACT YTD POSTED AND IN PROCESS	REMAINING BALANCE	PCT	
068	WASTE TRANSFER ENTERPRISE							
30	REVENUE							
7030	OTHER REFUNDS	3,000.00	3,000.00	0.00	6,833.40	3,833.40-	227	----------!!!!
7047	TRANSFER:FROM PILT FUND	0.00	0.00	0.00	153.80	153.80-	9999	----------!!!!
9056	TRANS/STATION FEES COLLECTED	57,000.00	57,000.00	7,342.00	34,232.00	22,768.00	60	------
9108	NSF RECOVERY FEE	5.00	5.00	0.00	0.00	5.00	0	
9258	WTS (CC FEE)	10,000.00	10,000.00	1,485.61	8,308.34	1,691.66	83	--------
9324	E WASTE	0.00	0.00	0.00	34.40	34.40-	9999	----------!!!!
9328	EL DEPOT	0.00	0.00	875.00	2,725.00	2,725.00-	9999	----------!!!!
TOTAL:	REVENUE	70,005.00	70,005.00	9,702.61	52,286.94	17,718.06	74	-------
TOTAL:	WASTE TRANSFER ENTERPRISE	70,005.00	70,005.00	9,702.61	52,286.94	17,718.06	74	-------

		ADOPTED BUDGET	REVISED BUDGET	ANNUAL ACT MTD POSTED AND IN PROCESS	ANNUAL ACT YTD POSTED AND IN PROCESS	REMAINING BALANCE	PCT	
069	EMERGENCY SERVICES FUND							
30	REVENUE							
7001	SALES TAX	810,000.00	810,000.00	78,047.85	533,686.63	276,313.37	65	------
7030	OTHER REFUNDS	0.00	0.00	0.00	840.70	840.70-	9999	----------!!!!
7180	HOMELAND SECURITY GRANT/FED	0.00	0.00	0.00	5,000.00	5,000.00-	9999	----------!!!!
7186	EMERGENCY MANAGEMENT	32,000.00	32,000.00	0.00	8,043.34	23,956.66	25	--
9290	EMPG SPECIAL PROJECT GRANT	5,259.00	5,259.00	0.00	0.00	5,259.00	0	
9330	SMALL DOLLAR GRANT	0.00	0.00	22,081.02	22,081.02	22,081.02-	9999	----------!!!!
TOTAL:	REVENUE	847,259.00	847,259.00	100,128.87	569,651.69	277,607.31	67	------
TOTAL:	EMERGENCY SERVICES FUND	847,259.00	847,259.00	100,128.87	569,651.69	277,607.31	67	------

			ADOPTED BUDGET	REVISED BUDGET	ANNUAL ACT MTD POSTED AND IN PROCESS	ANNUAL ACT YTD POSTED AND IN PROCESS	REMAINING BALANCE	PCT	
070	GARDNER PID	0045.9100							
30	REVENUE								
7030	OTHER REFUNDS		50.00	50.00	0.00	0.00	50.00	0	
9096	WATER FEES		26,000.00	26,000.00	2,421.96	14,912.31	11,087.69	57	-----
9097	SEWER FEES		25,000.00	25,000.00	1,935.68	13,770.19	11,229.81	55	-----
9105	LATE FEES		1,500.00	1,500.00	145.73	813.59	686.41	54	-----
9106	CONNECT/DISCONNECT FEES		100.00	100.00	54.84	317.02	217.02-	317	----------!!!!
9112	WATER PROJECT GRANT #12052		0.00	0.00	0.00	100.00	100.00-	9999	----------!!!!
9220	BULK WATER STATION FEES		32,000.00	32,000.00	3,091.00	18,677.01	13,322.99	58	-----
9238	WATER SVC. DEPOSIT		120.00	120.00	0.00	60.00	60.00	50	-----
9249	SEWER TAP (GPID)		0.00	0.00	0.00	3.00	3.00-	9999	----------!!!!
9262	BULK WATER APPLICATION FEE		500.00	500.00	200.00	950.00	450.00-	190	----------!!!!
9264	GPID WATER PLANT INVEST FEE		600.00	600.00	53.29	378.27	221.73	63	------
9265	GPID SEWER PLANT INVEST FEE		2,500.00	2,500.00	195.77	1,504.07	995.93	60	------
9312	GARDNER WTR SYS EMG GRANT		85,402.00	85,402.00	7,227.81	13,031.50	72,370.50	15	-
TOTAL:	REVENUE		173,772.00	173,772.00	15,326.08	64,516.96	109,255.04	37	---
TOTAL:	GARDNER PID	0045.9100	173,772.00	173,772.00	15,326.08	64,516.96	109,255.04	37	---

		ADOPTED BUDGET	REVISED ANNUAL BUDGET	ACT MTD POSTED AND IN PROCESS	ACT YTD POSTED AND IN PROCESS	REMAINING BALANCE	PCT	
071	DISASTER RECOVERY FUND							
30	REVENUE							
7164	MISC REVENUE	0.00	0.00	0.00	500.00	500.00-	9999	----------!!!!
9279	FLOOD GAUGE PROJECT GRANT	0.00	0.00	14,710.29	14,710.29	14,710.29-	9999	----------!!!!
9317	CARES HUERFANO COUNTY	0.00	0.00	0.00	95,245.61	95,245.61-	9999	----------!!!!
9326	DOLA SMALL BUS RECOVRY GRANT	0.00	0.00	0.00	130,897.00	130,897.00-	9999	----------!!!!
9329	AMER RESCUE PLAN RELIEF FUND	0.00	0.00	0.00	669,830.50	669,830.50-	9999	----------!!!!
TOTAL:	REVENUE	0.00	0.00	14,710.29	911,183.40	911,183.40-	9999	----------!!!!
TOTAL:	DISASTER RECOVERY FUND	0.00	0.00	14,710.29	911,183.40	911,183.40-	9999	----------!!!!

	ADOPTED BUDGET	REVISED ANNUAL BUDGET	ACT MTD POSTED AND IN PROCESS	ACT YTD POSTED AND IN PROCESS	REMAINING BALANCE	PCT
GRAND TOTAL	12,570,626.00	12,570,626.00	1,121,389.34	10,939,284.02	1,631,341.98	87

TOTAL NUMBER OF RECORDS PRINTED 171

THE PRECEDING REVENUE REPORT WAS REVIEWED AND APPROVED.

DATE _____ APPROVED BY _____

_____

_____

```
*****************************************************************************
*                    * * *  0  * * *                                         *
*                    * * *  0  * * *                                         *
*                    * * *  0  * * *                                         *
*                    * * *  0  * * *                                         *
*****************************************************************************
```

Report Selection:

Inclusions Ranges: Begin (thru) End
Fund & Account... _____ _____
_____ _____

Approval Plan..... ____ thru ____

Calendar Start Date..... 01 01 2021
Calendar End (As Of) Date..... 07 31 2021

Lowest Level to Print..... 3 . 0 (1.0 to 5.0)
Level to Page Break..... 1 . 0 (1.0 to 5.0)

MTD or QTD (M/Q)..... M

Print Inactive Accounts Too?..... N (Y/N)
Exclude Accounts with Zero Dollars. Y (Y/N)
(A)nnual Budget or (Y)ear-to-Date.. A (A/Y)
Open Download File in Excel..... N (Y/N)

Run Instructions:

Jobq	Banner	Copies	Form	Printer	Hold	Space	LPI	Lines	CPI	CP	SP	RT
5	0	01		COHUPRT14	Y	S	6	066	10			

Expenditure Guideline
FOR THE PERIOD(S) JAN 01, 2021 THROUGH JUL 31, 2021

		ANNUAL REVISED BUDGET	ENCUMBERED	ACT MTD POSTED AND IN PROCESS	ACT YTD POSTED AND IN PROCESS	REMAINING BALANCE	PCT	
001	GENERAL FUND							
40124	PLANNING AND ZONING							
1110	SALARIES (EMP)	164,915.00	0.00	16,712.59	101,004.51	63,910.49	61	------
1161	OASI (EMP)	10,225.00	0.00	1,036.19	6,262.27	3,962.73	61	------
1162	MEDICARE (EMP)	2,391.00	0.00	242.35	1,464.67	926.33	61	------
1164	INSURANCE(CCI/CO-OP)	16,603.00	0.00	2,460.84	15,372.78	1,230.22	92	---------
1165	INSURANCE (DENTAL)	2,094.00	0.00	223.65	1,230.30	863.70	58	-----
1210	OFFICE SUPPLIES	3,250.00	0.00	132.14	5,923.34	2,673.34-	182	----------!!!!
1306	REF & DED	8,500.00	0.00	0.00	10,000.00	1,500.00-	117	----------!
1310	PROFESSIONAL SERVICES	25,000.00	0.00	0.00	8,290.00	16,710.00	33	---
1321	TELEPHONE	850.00	0.00	88.31	581.53	268.47	68	------
1327	GUIDES AND CODES	600.00	0.00	0.00	0.00	600.00	0	
1330	TRAVEL & TRANSPORTATION	2,000.00	0.00	258.40	378.05	1,621.95	18	-
1335	FUEL REIMBURSEMENT	950.00	0.00	0.00	324.36	625.64	34	---
1336	DEPARTMENT UNIFORMS	200.00	0.00	0.00	0.00	200.00	0	
1350	PRINTING	500.00	0.00	0.00	66.57	433.43	13	-
1380	REPAIRS/MAINTENANCE	600.00	0.00	0.00	1,128.28	528.28-	188	----------!!!!
1384	BOARD COMPENSATION	2,500.00	0.00	0.00	829.09	1,670.91	33	---
1420	DUES & MEETINGS	300.00	0.00	355.00	355.00	55.00-	118	----------!
1457	CELLULAR PHONE SERVICE	900.00	0.00	92.90	735.26	164.74	81	--------
1670	PROFESSIONAL SERVICES(OTHER)	500.00	0.00	0.00	0.00	500.00	0	
1774	CODE ENFORCEMENT	0.00	0.00	45.66	744.23	744.23-	9999	----------!!!!
1814	LEASE AGREEMENT	1,100.00	0.00	0.00	136.38	963.62	12	-
2000	CAPITAL OUTLAY	10,000.00	0.00	0.00	0.00	10,000.00	0	
TOTAL:	PLANNING AND ZONING	253,978.00	0.00	21,648.03	154,826.62	99,151.38	60	------
40127	OTHER ADMINISTRATION							
1301	PROP & CASUALTY INS	66,964.00	0.00	0.00	106,870.59	39,906.59-	159	----------!!!!
1303	AUDITOR	11,257.00	0.00	0.00	0.00	11,257.00	0	
1304	ADVERTISING AND PROMOTION	0.00	0.00	136.00	136.00	136.00-	9999	----------!!!!
1305	PUBLISHING	8,000.00	0.00	493.91	4,805.92	3,194.08	60	------
1308	BANK CHARGES	1,800.00	0.00	1,415.31	3,150.96	1,350.96-	175	----------!!!!
1310	PROFESSIONAL SERVICES	48,000.00	0.00	3,675.00	32,777.50	15,222.50	68	------
1319	REFUNDS & ABATEMENTS	8,338.00	0.00	0.00	1,219.51	7,118.49	14	-
1320	TREASURER FEE	0.00	0.00	779.54	10,674.42	10,674.42-	9999	----------!!!!
1322	POSTAGE	10,500.00	0.00	0.00	9,798.19	701.81	93	---------
1446	CWCP	45,657.00	0.00	0.00	57,991.00	12,334.00-	127	----------!!
1447	UNEMPLOYMENT TAX	8,000.00	0.00	2,153.67	6,520.59	1,479.41	81	--------
1590	TRES/DEED DISBURSEMENT	26,000.00	0.00	1,185.00	10,896.94	15,103.06	41	----
1592	INSUFFICIENT FUNDS	20,000.00	0.00	0.00	2,600.00	17,400.00	13	-
1645	ATTORNEY (OTHER EXP)	0.00	0.00	0.00	999.00	999.00-	9999	----------!!!!
1732	CREDIT CARD ADJUSTMENT	0.00	0.00	0.00	1,299.00-	1,299.00	9999	----------!!!!
1759	PREEMPLOYMENT DRUG TESTING	1,000.00	0.00	173.00	2,159.50	1,159.50-	215	----------!!!!
1760	PRE-EMPLOY BACKGROUND CHECK	150.00	0.00	40.00	130.00	20.00	86	--------
1798	RENT RE-1	7,000.00	0.00	400.00	5,200.00	1,800.00	74	-------
1814	LEASE AGREEMENT	0.00	0.00	1,132.28	7,206.81	7,206.81-	9999	----------!!!!
1859	TRAINING	0.00	0.00	553.69	8,907.69	8,907.69-	9999	----------!!!!

		REVISED ANNUAL BUDGET	ENCUMBERED	ACT MTD POSTED AND IN PROCESS	ACT YTD POSTED AND IN PROCESS	REMAINING BALANCE	PCT	
001	GENERAL FUND							
TOTAL:	OTHER ADMINISTRATION	262,666.00	0.00	12,137.40	270,745.62	8,079.62-	103	----------
40210	CLERK AND RECORDER							
1100	SALARIES (OFF)	58,039.00	0.00	4,836.58	33,856.06	24,182.94	58	-----
1110	SALARIES (EMP)	170,057.00	0.00	14,452.42	100,144.50	69,912.50	58	-----
1160	OASI (OFF)	3,598.00	0.00	299.86	2,099.02	1,498.98	58	-----
1161	OASI (EMP)	10,544.00	0.00	896.04	6,208.90	4,335.10	58	-----
1162	MEDICARE (EMP)	2,466.00	0.00	209.54	1,451.99	1,014.01	58	-----
1164	INSURANCE(CCI/CO-OP)	41,919.00	0.00	3,528.52	24,701.48	17,217.52	58	-----
1165	INSURANCE (DENTAL)	3,128.00	0.00	260.65	1,824.55	1,303.45	58	-----
1172	MEDICARE (OFF)	842.00	0.00	70.14	490.98	351.02	58	-----
1210	OFFICE SUPPLIES	3,000.00	0.00	135.67	2,948.73	51.27	98	---------
1310	PROFESSIONAL SERVICES	500.00	0.00	0.00	0.00	500.00	0	
1321	TELEPHONE	3,079.00	0.00	88.31	1,642.80	1,436.20	53	-----
1322	POSTAGE	4,750.00	0.00	397.14	2,132.98	2,617.02	44	----
1330	TRAVEL & TRANSPORTATION	600.00	0.00	60.86	112.61	487.39	18	-
1335	FUEL REIMBURSEMENT	200.00	0.00	0.00	0.00	200.00	0	
1380	REPAIRS/MAINTENANCE	1,000.00	0.00	0.00	72.00	928.00	7	
1383	MAINTENANCE CONTRACT	11,200.00	0.00	0.00	6,420.00	4,780.00	57	-----
1420	DUES AND MEETINGS	1,200.00	0.00	0.00	937.29	262.71	78	-------
TOTAL:	CLERK AND RECORDER	316,122.00	0.00	25,235.73	185,043.89	131,078.11	58	-----
40250	ELECTIONS							
1110	SALARIES (EMP)	8,000.00	0.00	0.00	0.00	8,000.00	0	
1210	OFFICE SUPPLIES	1,500.00	0.00	0.00	714.35	785.65	47	----
1310	PROFESSIONAL SERVICES	500.00	0.00	0.00	0.00	500.00	0	
1322	POSTAGE	2,500.00	0.00	0.00	0.00	2,500.00	0	
1330	TRAVEL & TRANSPORTATION	300.00	0.00	0.00	0.00	300.00	0	
1380	REPAIRS AND MAINTENANCE	5,000.00	0.00	0.00	60.00	4,940.00	1	
1383	MAINTENANCE CONTRACT	0.00	0.00	0.00	4,500.00	4,500.00-	9999	----------!!!!
1392	RENTAL EQUIP/FIX.	2,000.00	0.00	0.00	0.00	2,000.00	0	
1615	ELECTION EQUIPMENT	22,725.00	0.00	0.00	22,724.58	0.42	99	---------
1788	BALLOT PRINTING & SERVICES	20,000.00	0.00	0.00	0.00	20,000.00	0	
TOTAL:	ELECTIONS	62,525.00	0.00	0.00	27,998.93	34,526.07	44	----
40300	TREASURER							
1100	SALARIES (OFF)	58,039.00	0.00	4,836.58	33,856.06	24,182.94	58	-----
1110	SALARIES (EMP)	108,573.00	0.00	6,542.00	60,689.15	47,883.85	55	-----
1160	OASI (OFF)	3,598.00	0.00	299.86	2,099.02	1,498.98	58	-----
1161	OASI (EMP)	6,732.00	0.00	405.60	3,762.71	2,969.29	55	-----
1162	MEDICARE (EMP)	1,574.00	0.00	94.86	880.03	693.97	55	-----
1164	INSURANCE(CCI/CO-OP)	34,418.00	0.00	2,911.38	19,830.64	14,587.36	57	-----
1165	INSURANCE (DENTAL)	2,648.00	0.00	186.20	1,493.44	1,154.56	56	-----
1172	MEDICARE (OFF)	842.00	0.00	70.14	490.98	351.02	58	-----
1210	OFFICE SUPPLIES	6,000.00	0.00	528.45	2,552.15	3,447.85	42	----
1321	TELEPHONE	1,588.00	0.00	154.09	820.61	767.39	51	-----

Expenditure Guideline
FOR THE PERIOD(S) JAN 01, 2021 THROUGH JUL 31, 2021

		ANNUAL REVISED BUDGET	ENCUMBERED	ACT MTD POSTED AND IN PROCESS	ACT YTD POSTED AND IN PROCESS	REMAINING BALANCE	PCT	
001	GENERAL FUND							
40300	TREASURER							
1322	POSTAGE	10,100.00	0.00	0.00	9,607.53	492.47	95	---------
1330	TRAVEL & TRANSPORTATION	850.00	0.00	560.84	560.84	289.16	65	------
1335	FUEL REIMBURSEMENT	250.00	0.00	0.00	60.48	189.52	24	--
1350	PRINTING	2,000.00	0.00	338.61	1,462.61	537.39	73	-------
1383	MAINTENANCE CONTRACT	285.00	0.00	25.77	178.05	106.95	62	------
1420	DUES & MEETINGS	1,350.00	0.00	0.00	700.00	650.00	51	-----
1589	CASH/SHORT	30.00	0.00	0.00	0.00	30.00	0	
1814	LEASE AGREEMENT	33,657.00	0.00	2,506.45	17,545.15	16,111.85	52	-----
TOTAL:	TREASURER	272,534.00	0.00	19,460.83	156,589.45	115,944.55	57	-----
40350	PUBLIC TRUSTEE							
1115	SALARIES(PUBLIC TRUSTEE)	12,500.00	0.00	0.00	0.00	12,500.00	0	
1163	OASI (PUBLIC TRUSTEE)	775.00	0.00	0.00	248.00	527.00	32	---
1164	INSURANCE(HEA/RML)	738.00	0.00	0.00	556.22	181.78	75	-------
1165	INSURANCE (DENTAL)	51.00	0.00	0.00	33.76	17.24	66	------
1173	MEDICARE (PUBLIC TRUSTEE)	181.00	0.00	0.00	4,058.00	3,877.00-	2241	----------!!!!
TOTAL:	PUBLIC TRUSTEE	14,245.00	0.00	0.00	4,895.98	9,349.02	34	---
40400	ASSESSOR							
1100	SALARIES (OFF)	58,039.00	0.00	4,836.58	33,856.06	24,182.94	58	-----
1110	SALARIES (EMP)	137,288.00	0.00	11,065.64	73,373.81	63,914.19	53	-----
1160	OASI (OFF)	3,598.00	0.00	299.86	2,099.02	1,498.98	58	-----
1161	OASI (EMP)	8,512.00	0.00	686.06	4,549.14	3,962.86	53	-----
1162	MEDICARE (EMP)	1,991.00	0.00	160.46	1,063.99	927.01	53	-----
1164	INSURANCE(CCI/CO-OP)	54,295.00	0.00	5,195.34	35,368.31	18,926.69	65	------
1165	INSURANCE (DENTAL)	3,502.00	0.00	342.65	2,338.84	1,163.16	66	------
1172	MEDICARE (OFF)	842.00	0.00	70.14	490.98	351.02	58	-----
1210	OFFICE SUPPLIES	3,800.00	0.00	528.33	2,285.72	1,514.28	60	------
1310	PROFESSIONAL SERVICES	30,000.00	0.00	0.00	100.00	29,900.00	0	
1312	CERTIFICATION FEES	722.00	0.00	0.00	0.00	722.00	0	
1321	TELEPHONE	1,588.00	0.00	176.62	1,040.75	547.25	65	------
1322	POSTAGE	5,500.00	0.00	0.00	4,950.00	550.00	90	---------
1330	TRAVEL & TRANSPORTATION	2,500.00	0.00	13.74	210.35	2,289.65	8	
1335	FUEL REIMBURSEMENT	1,000.00	0.00	129.45	264.66	735.34	26	--
1350	PRINTING	2,000.00	0.00	0.00	539.90	1,460.10	26	--
1380	REPAIRS/MAINTENANCE	1,200.00	0.00	0.00	0.00	1,200.00	0	
1383	MAINTENANCE CONTRACT	309.00	0.00	25.77	178.04	130.96	57	-----
1420	DUES AND MEETINGS	3,000.00	0.00	360.00	525.00	2,475.00	17	-
1814	LEASE AGREEMENT	36,002.00	0.00	2,692.60	18,848.20	17,153.80	52	-----
2000	CAPITAL OUTLAY	0.00	0.00	0.00	10,200.00	10,200.00-	9999	----------!!!!
TOTAL:	ASSESSOR	355,688.00	0.00	26,583.24	192,282.77	163,405.23	54	-----
40600	PUBLIC WORKS							
1110	SALARIES (EMP)	176,928.00	0.00	16,430.24	96,801.38	80,126.62	54	-----
1161	OASI (EMP)	10,970.00	0.00	1,018.67	6,001.69	4,968.31	54	-----

		REVISED ANNUAL BUDGET	ENCUMBERED	ACT MTD POSTED AND IN PROCESS	ACT YTD POSTED AND IN PROCESS	REMAINING BALANCE	PCT
001	GENERAL FUND						
40600	PUBLIC WORKS						
1162	MEDICARE (EMP)	2,565.00	0.00	238.25	1,403.66	1,161.34	54 -----
1164	INSURANCE(CCI/CO-OP)	28,081.00	0.00	3,524.56	22,828.78	5,252.22	81 --------
1165	INSURANCE (DENTAL)	1,787.00	0.00	223.50	1,452.60	334.40	81 --------
1220	OPERATING SUPPLIES	580.00	0.00	17.94	550.56	29.44	94 ---------
1310	PROFESSIONAL SERVICES	10,000.00	0.00	143.64	4,417.40	5,582.60	44 ----
1311	SEWER/WATER/TRASH	3,500.00	0.00	184.47	1,299.99	2,200.01	37 ---
1323	TELEPHONE G.C CNTR	696.00	0.00	61.28	429.38	266.62	61 ------
1329	COURTHOUSE SUPPLIES	5,000.00	0.00	395.65	2,319.22	2,680.78	46 ----
1331	C. CENTER SUPPLIES (W)	2,000.00	0.00	277.48	444.03	1,555.97	22 --
1334	G/C CENTER SUPPLIES	400.00	0.00	0.00	0.00	400.00	0
1335	FUEL REIMBURSEMENT	800.00	0.00	132.66	716.76	83.24	89 --------
1340	DEPOSIT REFUNDS W&G	4,500.00	0.00	600.00	1,035.00	3,465.00	23 --
1342	CONTRACT PAY/NO BENEFITS	7,800.00	0.00	650.00	4,550.00	3,250.00	58 -----
1370	UTILITIES	76,000.00	0.00	4,938.37	39,601.72	36,398.28	52 -----
1380	REPAIRS/MAINTENANCE	5,000.00	0.00	108.74	316.81	4,683.19	6
1381	REPAIRS/REMODELING	16,000.00	0.00	1,622.06	11,918.63	4,081.37	74 -------
1382	EQUIPMENT & FIXTURES	2,000.00	0.00	0.00	102.84	1,897.16	5
1457	CELLULAR SERVICE	640.00	0.00	160.89	768.99	128.99-	120 ----------!!
1752	CELL SERVICE/CC	500.00	0.00	0.00	156.12	343.88	31 ---
1753	FUEL REIMBURSEMENT/CC	1,000.00	0.00	194.10	848.17	151.83	84 --------
1773	CSWD (UTILITY)	7,500.00	0.00	955.43	5,505.90	1,994.10	73 -------
1792	DEPOT REPAIRS/BLDG SUPPLIES	0.00	0.00	39.38	39.38	39.38-	9999 ----------!!!!
1807	DEPOSIT REFUND CMP	0.00	0.00	600.00	900.00	900.00-	9999 ----------!!!!
1815	EQUIPMENT REPAIRS	2,000.00	0.00	429.12	900.70	1,099.30	45 ----
1816	WASHINGTON SCHOOL	3,000.00	0.00	0.00	0.00	3,000.00	0
1817	MINING MUSEUM	2,000.00	0.00	0.00	0.00	2,000.00	0
1818	CMP SUPPLIES	2,000.00	0.00	300.00	1,200.00	800.00	60 ------
TOTAL:	PUBLIC WORKS	373,247.00	0.00	33,246.43	206,509.71	166,737.29	55 -----
41510	DISTRICT ATTORNEY						
1324	D.A. PAYMENTS	264,252.00	0.00	22,021.00	154,147.00	110,105.00	58 -----
1370	UTILITIES	5,000.00	0.00	286.57	2,485.84	2,514.16	49 ----
TOTAL:	DISTRICT ATTORNEY	269,252.00	0.00	22,307.57	156,632.84	112,619.16	58 -----
42110	SHERIFF						
1100	SALARIES (OFF)	58,331.00	0.00	4,860.94	35,646.90	22,684.10	61 ------
1110	SALARIES (EMP)	415,059.00	0.00	31,700.90	226,408.85	188,650.15	54 -----
1160	OASI (OFF)	3,617.00	0.00	301.38	2,210.12	1,406.88	61 ------
1161	OASI (EMP)	25,734.00	0.00	1,965.46	14,037.39	11,696.61	54 -----
1162	MEDICARE (EMP)	6,018.00	0.00	459.68	3,283.03	2,734.97	54 -----
1164	INSURANCE(CCI/CO-OP)	118,226.00	0.00	5,716.50	45,663.44	72,562.56	38 ---
1165	INSURANCE (DENTAL)	9,296.00	0.00	523.34	4,152.74	5,143.26	44 ----
1172	MEDICARE (OFF)	1,128.00	0.00	70.48	516.86	611.14	45 ----
1210	OFFICE SUPPLIES	2,000.00	0.00	107.24	1,609.78	390.22	80 --------
1220	OPERATING SUPPLIES	1,500.00	0.00	0.00	778.44	721.56	51 -----

		ANNUAL REVISED BUDGET	ENCUMBERED	ACT MTD POSTED AND IN PROCESS	ACT YTD POSTED AND IN PROCESS	REMAINING BALANCE	PCT	
001	GENERAL FUND							
42110	SHERIFF							
1310	PROFESSIONAL SERVICES	1,000.00	0.00	133.34	1,932.56	932.56-	193	----------!!!!
1312	CERTIFICATION FEES	60.00	0.00	0.00	0.00	60.00	0	
1321	TELEPHONE	3,325.00	0.00	579.96	2,452.83	872.17	73	-------
1327	GUIDES & CODES	350.00	0.00	0.00	207.40	142.60	59	-----
1330	TRAVEL & TRANSPORTATION	1,500.00	0.00	209.69	461.65	1,038.35	30	---
1335	FUEL REIMBURSEMENT	15,000.00	0.00	0.00	8,056.58	6,943.42	53	-----
1336	DEPARTMENT UNIFORMS	1,800.00	0.00	54.44	2,326.99	526.99-	129	----------!!
1380	REPAIRS/MAINTENANCE	25,000.00	0.00	4,017.67	9,521.21	15,478.79	38	---
1382	REP. EQUIP/FIXTURES	200.00	0.00	0.00	0.00	200.00	0	
1393	TRAINING	10,000.00	0.00	3,392.03	4,409.27	5,590.73	44	----
1420	DUES AND MEETINGS	4,000.00	0.00	0.00	4,748.50	748.50-	118	----------!
1440	FIRE FIGHTING	4,000.00	0.00	0.00	3,333.74	666.26	83	--------
1457	CELLULAR SERVICE	5,100.00	0.00	579.58	5,745.54	645.54-	112	----------!
1498	SEARCH & RESCUE	2,000.00	0.00	0.00	785.00	1,215.00	39	---
1500	EQUIPMENT	8,500.00	0.00	1,689.20	7,297.71	1,202.29	85	--------
1551	VEHICLE	30,000.00	0.00	23.12	278.72	29,721.28	0	
1711	PRINCIPAL ON LEASE PURCHASE	18,099.00	0.00	44,116.61	74,480.91	56,381.91-	411	----------!!!!
1712	INTEREST ON LEASE PURCHASE	1,460.00	0.00	2,919.02	2,919.02	1,459.02-	199	----------!!!!
1770	HOMELESS TRANSIENT FUNDS	1,500.00	0.00	0.00	184.87	1,315.13	12	-
1774	CODE ENFORCEMENT	5,000.00	0.00	76.12	167.27	4,832.73	3	
1865	SHERIFF/DETENTION GRANTS	0.00	0.00	24,944.50	24,944.50	24,944.50-	9999	----------!!!!
2000	CAPITAL OUTLAY	20,000.00	0.00	0.00	0.00	20,000.00	0	
TOTAL:	SHERIFF	798,803.00	0.00	128,441.20	488,561.82	310,241.18	61	------
42115	SHERIFF(CITY OF WALSENBURG)							
1100	SALARIES (OFF)	19,444.00	0.00	1,620.32	9,721.92	9,722.08	49	----
1110	SALARIES (EMP)	466,435.00	0.00	40,448.74	277,268.77	189,166.23	59	-----
1160	OASI (OFF)	1,206.00	0.00	100.46	602.76	603.24	49	----
1161	OASI (EMP)	28,919.00	0.00	2,507.82	17,190.64	11,728.36	59	-----
1162	MEDICARE (EMP)	6,763.00	0.00	586.50	4,020.36	2,742.64	59	-----
1164	INSURANCE(HEA/RML)	100,552.00	0.00	12,440.60	84,503.48	16,048.52	84	--------
1165	INSURANCE (DENTAL)	6,982.00	0.00	824.91	5,657.11	1,324.89	81	--------
1172	MEDICARE (OFF)	282.00	0.00	23.50	141.00	141.00	50	-----
1210	OFFICE SUPPLIES	1,200.00	0.00	130.72	430.02	769.98	35	---
1220	OPERATING SUPPLIES	2,000.00	0.00	99.98	576.10	1,423.90	28	--
1310	PROFESSIONAL SERVICES	1,000.00	0.00	133.34	1,532.56	532.56-	153	----------!!!!
1312	CERTIFICATION FEES	60.00	0.00	0.00	0.00	60.00	0	
1327	GUIDES AND CODES	350.00	0.00	113.68-	27.28-	377.28	7	
1330	TRAVEL & TRANSPORTATION	1,500.00	0.00	175.87	375.93	1,124.07	25	--
1335	FUEL REIMBURSEMENT	15,000.00	0.00	0.00	9,453.14	5,546.86	63	------
1336	DEPARTMENT UNIFORMS	3,000.00	0.00	0.00	2,861.86	138.14	95	---------
1380	REPAIRS/MAINTENANCE	25,000.00	0.00	4,463.24	18,512.68	6,487.32	74	-------
1382	EQUIPMENT & FIXTURES	200.00	0.00	0.00	0.00	200.00	0	
1393	TRAINING	10,000.00	0.00	3,048.04	6,077.74	3,922.26	60	------
1420	DUES & MEETINGS	4,000.00	0.00	111.13	1,511.63	2,488.37	37	---

		ANNUAL REVISED BUDGET	ENCUMBERED	ACT MTD POSTED AND IN PROCESS	ACT YTD POSTED AND IN PROCESS	REMAINING BALANCE	PCT	
001	GENERAL FUND							
42115	SHERIFF(CITY OF WALSENBURG)							
1457	CELLULAR SERVICE	5,100.00	0.00	0.00	0.00	5,100.00	0	
1500	EQUIPMENT	8,500.00	0.00	1,608.58	9,308.26	808.26-	109	----------
1551	VEHICLE	30,000.00	0.00	0.00	39,200.00	9,200.00-	130	----------!!!
1711	PRINCIPAL ON LEASE PURCHASE	18,099.00	0.00	7,920.00	38,284.30	20,185.30-	211	----------!!!!
1712	INTEREST ON LEASE PURCHASE	1,460.00	0.00	0.00	0.00	1,460.00	0	
2000	CAPITAL OUTLAY	20,000.00	0.00	0.00	0.00	20,000.00	0	
TOTAL:	SHERIFF(CITY OF WALSENBURG)	777,052.00	0.00	76,130.07	527,202.98	249,849.02	67	------
42120	JAIL							
1110	SALARIES (EMP)	381,394.00	0.00	22,945.39	185,347.47	196,046.53	48	----
1161	OASI (EMP)	23,646.00	0.00	1,422.66	11,491.86	12,154.14	48	----
1162	MEDICARE (EMP)	5,530.00	0.00	332.74	2,687.84	2,842.16	48	----
1164	INSURANCE(CCI/CO-OP)	72,981.00	0.00	5,022.16	37,637.00	35,344.00	51	-----
1165	INSURANCE (DENTAL)	6,903.00	0.00	320.45	2,615.70	4,287.30	37	---
1210	OFFICE SUPPLIES	1,750.00	0.00	299.39	1,148.84	601.16	65	------
1220	OPERATING SUPPLIES	15,000.00	0.00	2,222.22	14,340.44	659.56	95	---------
1310	PROFESSIONAL SERVICES	35,000.00	0.00	2,259.18	14,830.86	20,169.14	42	----
1311	SEWER/WATER/TRASH	1,680.00	0.00	140.00	980.00	700.00	58	-----
1313	MEALS	55,000.00	0.00	4,932.46	26,592.88	28,407.12	48	----
1321	TELEPHONE	1,500.00	0.00	137.75	866.68	633.32	57	-----
1336	DEPARTMENT UNIFORMS	2,000.00	0.00	0.00	2,334.48	334.48-	116	----------!
1363	HOUSE PRISONERS	40,000.00	0.00	4,045.00	10,145.00	29,855.00	25	--
1370	UTILITIES	45,000.00	0.00	2,974.47	22,935.90	22,064.10	50	-----
1380	REPAIRS/MAINTENANCE	25,000.00	0.00	190.87	6,698.57	18,301.43	26	--
1381	REPAIRS/REMODELING	2,000.00	0.00	0.00	0.00	2,000.00	0	
1393	TRAINING	1,000.00	0.00	0.00	0.00	1,000.00	0	
1500	EQUIPMENT	5,000.00	0.00	249.98	4,046.59	953.41	80	--------
1597	INTERNET SERVICE	1,410.00	0.00	105.20	737.64	672.36	52	-----
1602	COMMISSARY	9,000.00	0.00	2,563.52	6,929.05	2,070.95	76	-------
1814	LEASE AGREEMENT	2,500.00	0.00	260.90	1,866.00	634.00	74	-------
2000	CAPITAL OUTLAY	15,000.00	0.00	0.00	0.00	15,000.00	0	
TOTAL:	JAIL	748,294.00	0.00	50,424.34	354,232.80	394,061.20	47	----
42125	DISPATCH							
1110	SALARIES (EMP)	0.00	0.00	0.00	345.84	345.84-	9999	----------!!!!
1161	OASI (EMP)	0.00	0.00	0.00	21.44	21.44-	9999	----------!!!!
1162	MEDICARE (EMP)	0.00	0.00	0.00	5.01	5.01-	9999	----------!!!!
TOTAL:	DISPATCH	0.00	0.00	0.00	372.29	372.29-	9999	----------!!!!
42130	CORONER							
1100	SALARIES (OFF)	25,808.00	0.00	2,150.66	15,054.62	10,753.38	58	-----
1160	OASI (OFF)	1,600.00	0.00	133.34	933.38	666.62	58	-----
1164	INSURANCE(HEA/RML)	16,898.00	0.00	1,409.50	9,866.50	7,031.50	58	-----
1165	INSURANCE (DENTAL)	1,161.00	0.00	96.80	677.60	483.40	58	-----
1172	MEDICARE (OFF)	374.00	0.00	31.18	218.26	155.74	58	-----

		REVISED ANNUAL BUDGET	ENCUMBERED	ACT MTD POSTED AND IN PROCESS	ACT YTD POSTED AND IN PROCESS	REMAINING BALANCE	PCT	
001	GENERAL FUND							
42130	CORONER							
1210	SUPPLIES	800.00	0.00	19.35	352.27	447.73	44	----
1220	OPERATING SUPPLIES	1,500.00	0.00	0.00	944.00	556.00	62	------
1310	PROFESSIONAL SERVICES	1,000.00	0.00	0.00	256.50	743.50	25	--
1315	AUTOPSIES	21,000.00	0.00	1,500.00	6,000.00	15,000.00	28	--
1321	TELEPHONE	731.00	0.00	70.20	524.03	206.97	71	-------
1322	POSTAGE	100.00	0.00	0.00	0.00	100.00	0	
1330	TRAVEL & TRANSPORTATION	400.00	0.00	1,060.52	1,317.25	917.25-	329	----------!!!!
1350	PRINTING	250.00	0.00	0.00	217.49	32.51	86	--------
1420	DUES & MEETINGS	3,000.00	0.00	0.00	2,008.00	992.00	66	------
1441	INVESTIGATION	4,100.00	0.00	689.00	918.00	3,182.00	22	--
1457	CELLULAR SERVICE	600.00	0.00	40.07	280.51	319.49	46	----
1488	DECEASED TRANSPORT	5,000.00	0.00	150.00	800.00	4,200.00	16	-
1544	BURIAL	1,000.00	0.00	0.00	0.00	1,000.00	0	
TOTAL:	CORONER	85,322.00	0.00	7,350.62	40,368.41	44,953.59	47	----
42140	LAW ENFORCEMENT ASSISTANCE							
1426	INTOXILYZER	500.00	0.00	0.00	0.00	500.00	0	
TOTAL:	LAW ENFORCEMENT ASSISTANCE	500.00	0.00	0.00	0.00	500.00	0	
44110	HEALTH DEPARTMENT							
1316	HEALTH PAYMENTS	155,607.00	0.00	8,467.25	59,270.75	96,336.25	38	---
TOTAL:	HEALTH DEPARTMENT	155,607.00	0.00	8,467.25	59,270.75	96,336.25	38	---
46100	CSU COOPERATIVE EXTENSION							
1110	SALARIES (EMP)	19,889.00	0.00	2,130.14	11,671.32	8,217.68	58	-----
1161	OASI (EMP)	1,233.00	0.00	132.07	723.61	509.39	58	-----
1162	MEDICARE (EMP)	288.00	0.00	30.89	169.23	118.77	58	-----
1210	OFFICE SUPPLIES	1,250.00	0.00	0.00	66.80	1,183.20	5	
1321	TELEPHONE	2,130.00	0.00	70.20	1,167.39	962.61	54	-----
1330	TRAVEL & TRANSPORTATION	2,500.00	0.00	0.00	0.00	2,500.00	0	
1335	FUEL REIMBURSEMENT	100.00	0.00	295.76	295.76	195.76-	295	----------!!!!
1342	CONTRACT PAY/NO BENEFITS	14,700.00	0.00	0.00	7,350.00	7,350.00	50	-----
1380	REPAIRS/MAINTENANCE	100.00	0.00	0.00	0.00	100.00	0	
1392	RENTAL EQUIP/FIX.	500.00	0.00	0.00	0.00	500.00	0	
2000	CAPITAL OUTLAY	500.00	0.00	0.00	69.99	430.01	13	-
TOTAL:	CSU COOPERATIVE EXTENSION	43,190.00	0.00	2,659.06	21,514.10	21,675.90	49	----
46400	AIRPORT							
1220	OPERATING SUPPLIES	150.00	0.00	0.00	102.79	47.21	68	------
1301	PROPERTY & CASUALTY INS.	2,508.00	0.00	0.00	2,715.00	207.00-	108	----------
1310	PROFESSIONAL SERVICES	0.00	0.00	0.00	655.00	655.00-	9999	----------!!!!
1311	SEWER/WATER/TRASH	0.00	0.00	0.00	150.00	150.00-	9999	----------!!!!
1321	TELEPHONE	799.00	0.00	73.76	551.79	247.21	69	------
1333	AVIATION FUEL	98,000.00	0.00	15,060.30	41,674.38	56,325.62	42	----
1342	CONTRACT PAY/NO BEN.	3,600.00	0.00	300.00	2,100.00	1,500.00	58	-----

		REVISED ANNUAL BUDGET	ENCUMBERED	ACT MTD POSTED AND IN PROCESS	ACT YTD POSTED AND IN PROCESS	REMAINING BALANCE	PCT	
001	GENERAL FUND							
46400	AIRPORT							
1370	UTILITIES	4,800.00	0.00	391.18	5,087.75	287.75-	105	----------
1380	REPAIRS/MAINTENANCE	1,600.00	0.00	250.00	1,935.33	335.33-	120	----------!!
1381	REPAIRS/REMODELING	1,500.00	0.00	14.84	2,055.24	555.24-	137	----------!!!
1382	EQUIPMENT & FIXTURES	0.00	0.00	0.00	12.66	12.66-	9999	----------!!!!
1383	MAINTENANCE CONTRACT	14,618.00	0.00	0.00	5,787.00	8,831.00	39	---
1457	CELLULAR SERVICE	380.00	0.00	30.58	213.89	166.11	56	-----
1742	CREDIT CARD FEES	225.00	0.00	0.92	81.39	143.61	36	---
TOTAL:	AIRPORT	128,180.00	0.00	16,121.58	63,122.22	65,057.78	49	----
46700	VETERANS							
1110	SALARIES (EMP)	14,373.00	0.00	1,197.74	8,920.55	5,452.45	62	------
1161	OASI (EMP)	891.00	0.00	74.26	553.07	337.93	62	------
1162	MEDICARE (EMP)	208.00	0.00	17.36	129.30	78.70	62	------
1210	OFFICE SUPPLIES	100.00	0.00	0.00	0.00	100.00	0	
1330	TRAVEL & TRANSPORTATION	975.00	0.00	0.00	0.00	975.00	0	
1420	DUES & MEETINGS	305.00	0.00	0.00	0.00	305.00	0	
1457	CELLULAR PHONE SERVICE	634.00	0.00	45.66	384.65	249.35	60	------
1601	VETERANS TRANSPORTATION	400.00	0.00	0.00	0.00	400.00	0	
TOTAL:	VETERANS	17,886.00	0.00	1,335.02	9,987.57	7,898.43	55	-----
47900	ADMINISTRATION OFFICE							
1100	SALARIES (OFF)	179,347.00	0.00	14,945.58	104,557.36	74,789.64	58	-----
1110	SALARIES (EMP)	282,400.00	0.00	28,141.16	187,456.55	94,943.45	66	------
1160	OASI (OFF)	11,120.00	0.00	926.62	6,482.52	4,637.48	58	-----
1161	OASI (EMP)	17,509.00	0.00	1,744.77	11,622.33	5,886.67	66	------
1162	MEDICARE (EMP)	4,095.00	0.00	408.06	2,718.17	1,376.83	66	------
1164	INSURANCE(CCI/CO-OP)	100,956.00	0.00	7,314.08	45,894.94	55,061.06	45	----
1165	INSURANCE (DENTAL)	6,734.00	0.00	432.20	2,891.15	3,842.85	42	----
1172	MEDICARE (OFF)	2,601.00	0.00	216.74	1,516.28	1,084.72	58	-----
1210	OFFICE SUPPLIES	7,500.00	0.00	1,470.72	9,989.98	2,489.98-	133	----------!!!
1310	PROFESSIONAL SERVICES	500.00	0.00	0.00	9,917.24	9,417.24-	1983	----------!!!!
1321	TELEPHONE	6,728.00	0.00	958.63	4,895.61	1,832.39	72	-------
1330	TRAVEL & TRANSPORTATION	10,000.00	0.00	1,194.82	3,101.01	6,898.99	31	---
1335	FUEL REIMBURSEMENT	1,500.00	0.00	141.57	194.02	1,305.98	12	-
1339	DUES & MEETINGS	2,500.00	0.00	350.00	6,306.70	3,806.70-	252	----------!!!!
1350	PRINTING	2,000.00	0.00	0.00	1,293.77	706.23	64	------
1380	REPAIRS/MAINTENANCE	200.00	0.00	0.00	584.45	384.45-	292	----------!!!!
1393	TRAINING	0.00	0.00	184.38	389.38	389.38-	9999	----------!!!!
1420	DUES & MEETINGS/CCI	14,000.00	0.00	0.00	12,000.00	2,000.00	85	--------
1457	CELLULAR PHONE SERVICE	780.00	0.00	80.66	474.39	305.61	60	------
1618	CONTINGENCY	30,000.00	0.00	99.10	1,952.93	28,047.07	6	
1814	LEASE AGREEMENT	23,070.00	0.00	1,830.88	13,166.16	9,903.84	57	-----
TOTAL:	ADMINISTRATION OFFICE	703,540.00	0.00	60,439.97	427,404.94	276,135.06	60	------
49500	IT/GIS							

		REVISED ANNUAL BUDGET	ENCUMBERED	ACT MTD POSTED AND IN PROCESS	ACT YTD POSTED AND IN PROCESS	REMAINING BALANCE	PCT	
001	GENERAL FUND							
49500	IT/GIS							
1110	SALARIES (EMP)	100,218.00	0.00	9,591.70	61,879.47	38,338.53	61	------
1161	OASI (EMP)	6,214.00	0.00	594.70	3,836.61	2,377.39	61	------
1162	MEDICARE (EMP)	1,453.00	0.00	139.08	897.28	555.72	61	------
1164	INSURANCE(CCI/CO-OP)	18,754.00	0.00	1,782.95	11,309.32	7,444.68	60	------
1165	INSURANCE (DENTAL)	1,162.00	0.00	111.79	711.65	450.35	61	------
1210	OFFICE SUPPLIES	0.00	0.00	125.95	257.05	257.05-	9999	----------!!!!
1457	CELLULAR SERVICE	1,100.00	0.00	120.01	817.83	282.17	74	-------
1680	COMPUTER/IT	6,000.00	0.00	560.56	4,057.85	1,942.15	67	------
2000	CAPITAL OUTLAY	10,000.00	0.00	0.00	26,282.25	16,282.25-	262	----------!!!!
TOTAL:	IT/GIS	144,901.00	0.00	13,026.74	110,049.31	34,851.69	75	-------
50200	JUDICIAL CENTER							
1820	JUDICIAL CENTER MAINTENANCE	35,000.00	0.00	0.00	1,294.00	33,706.00	3	
1840	PRINCIPAL ON DEBT SERVICE	235,000.00	0.00	0.00	0.00	235,000.00	0	
1841	INTEREST ON DEBT SERVICE	339,000.00	0.00	0.00	169,500.00	169,500.00	50	-----
1847	JUDICIAL CENTER SUPPLIES	5,000.00	0.00	0.00	4,069.83	930.17	81	--------
1853	UTILITIES JUDICIAL	0.00	0.00	487.82	33,724.46	33,724.46-	9999	----------!!!!
1854	TELEPHONE JUDICIAL	0.00	0.00	418.06	3,132.33	3,132.33-	9999	----------!!!!
TOTAL:	JUDICIAL CENTER	614,000.00	0.00	905.88	211,720.62	402,279.38	34	---
TOTAL:	GENERAL FUND	6,397,532.00	0.00	525,920.96	3,669,333.62	2,728,198.38	57	-----

		REVISED ANNUAL BUDGET	ENCUMBERED	ACT MTD POSTED AND IN PROCESS	ACT YTD POSTED AND IN PROCESS	REMAINING BALANCE	PCT	
002	ROAD & BRIDGE FUND							
43000	APPORTIONMENT/MUNICIPALITIES							
1516	MUNICIPAL APPORTIONS	1,100.00	0.00	0.00	1,188.99	88.99-	108	----------
TOTAL:	APPORTIONMENT/MUNICIPALITIES	1,100.00	0.00	0.00	1,188.99	88.99-	108	----------
43040	MAINTENANCE OF CONDITION							
1392	RENTAL OF EQUIP/FIXTURES	1,000.00	0.00	0.00	1,537.78	537.78-	153	----------!!!!
1501	GRAVEL/SAND/SALT	30,000.00	0.00	150.00	13,968.06	16,031.94	46	----
1502	ROAD OIL & ASPHALT	3,000.00	0.00	0.00	289.44	2,710.56	9	
1503	CULVERTS AND LUMBER	12,000.00	0.00	6,176.50	6,176.50	5,823.50	51	-----
1504	GAS, FUEL AND OIL	280,000.00	0.00	29,346.57	169,425.62	110,574.38	60	------
1505	TIRES AND TUBES	45,000.00	0.00	3,377.18	17,517.77	27,482.23	38	---
1506	PARTS	115,000.00	0.00	7,154.68	57,923.55	57,076.45	50	-----
1507	CONTRACTED REPAIRS	90,000.00	0.00	14,001.16	22,829.32	67,170.68	25	--
1508	GRADER BLADES	20,000.00	0.00	0.00	11,532.00	8,468.00	57	-----
1509	EASEMENTS	2,000.00	0.00	0.00	2,000.00	0.00	100	----------
1532	MAGNESIUM CHLORIDE MGCL2	150,000.00	0.00	0.00	0.00	150,000.00	0	
1652	CATTLE GUARDS	20,000.00	0.00	526.52	864.55	19,135.45	4	
1659	CHAINS	6,000.00	0.00	0.00	0.00	6,000.00	0	
1711	PRINCIPAL ON LEASE PURCHASE	90,027.00	0.00	4,416.44	64,807.50	25,219.50	71	-------
1712	INTEREST ON LEASE PURCHASE	12,052.00	0.00	659.50	11,890.99	161.01	98	---------
TOTAL:	MAINTENANCE OF CONDITION	876,079.00	0.00	65,808.55	380,763.08	495,315.92	43	----
43080	ADMINISTRATION							
1110	SALARIES (EMP)	891,722.00	0.00	81,539.45	525,226.47	366,495.53	58	-----
1161	OASI (EMP)	55,287.00	0.00	5,055.49	32,564.38	22,722.62	58	-----
1162	MEDICARE (EMP)	12,930.00	0.00	1,182.28	7,615.57	5,314.43	58	-----
1164	INSURANCE(CCI/CO-OP)	270,764.00	0.00	22,657.84	158,599.76	112,164.24	58	-----
1165	INSURANCE (DENTAL)	18,267.00	0.00	1,496.85	10,477.95	7,789.05	57	-----
1168	INSURANCE (LIFE)	240.00	0.00	10.00	80.00	160.00	33	---
1301	PROP & CASUALTY INSURANCE	52,410.00	0.00	0.00	64,714.59	12,304.59-	123	----------!!
1303	AUDITOR	4,793.00	0.00	0.00	0.00	4,793.00	0	
1309	COMMUNICATIONS	1,000.00	0.00	0.00	0.00	1,000.00	0	
1310	PROFESSIONAL SERVICES	5,000.00	0.00	14.99	1,754.93	3,245.07	35	---
1311	SEWER/WATER/TRASH	3,800.00	0.00	291.68	2,164.82	1,635.18	56	-----
1320	TREASURER FEE	21,500.00	0.00	1,463.99	9,746.12	11,753.88	45	----
1321	TELEPHONE	3,600.00	0.00	367.90	2,459.96	1,140.04	68	------
1330	TRAVEL & TRANSPORTATION	200.00	0.00	0.00	0.00	200.00	0	
1336	DEPARTMENT UNIFORMS	500.00	0.00	0.00	500.00	0.00	100	----------
1370	UTILITIES	28,000.00	0.00	763.86	16,595.98	11,404.02	59	-----
1381	REPAIRS/REMODELING	2,500.00	0.00	0.00	704.88	1,795.12	28	--
1393	TRAINING	1,000.00	0.00	0.00	0.00	1,000.00	0	
1420	DUES AND MEETINGS	100.00	0.00	0.00	39.34	60.66	39	---
1446	CWCP	52,712.00	0.00	0.00	54,397.00	1,685.00-	103	----------
1447	UNEMPLOYMENT TAX	3,000.00	0.00	703.71	2,065.19	934.81	68	------
1457	CELLULAR SERVICE	1,150.00	0.00	153.91	1,194.06	44.06-	103	----------
1511	OPERATING SUPPLIES	28,000.00	0.00	6,680.22	16,997.02	11,002.98	60	------

		ANNUAL REVISED BUDGET	ENCUMBERED	ACT MTD POSTED AND IN PROCESS	ACT YTD POSTED AND IN PROCESS	REMAINING BALANCE	PCT	
002	ROAD & BRIDGE FUND							
43080	ADMINISTRATION							
1540	DRUG TESTING	1,300.00	0.00	146.00	608.50	691.50	46	----
1598	SIGNS	3,000.00	0.00	0.00	112.00	2,888.00	3	
TOTAL:	ADMINISTRATION	1,462,775.00	0.00	122,528.17	908,618.52	554,156.48	62	------
50400	WEED DEPARTMENT							
1110	SALARIES (EMP)	27,667.00	0.00	2,305.60	16,101.70	11,565.30	58	-----
1161	OASI (EMP)	1,715.00	0.00	142.94	998.26	716.74	58	-----
1162	MEDICARE (EMP)	401.00	0.00	33.44	233.53	167.47	58	-----
1164	INSURANCE(HEA/RML)	9,300.00	0.00	845.70	5,919.90	3,380.10	63	------
1165	INSURANCE (DENTAL)	639.00	0.00	58.08	406.56	232.44	63	------
1210	OFFICE SUPPLIES	80.00	0.00	0.00	0.00	80.00	0	
1336	DEPARTMENT UNIFORMS	200.00	0.00	0.00	0.00	200.00	0	
1380	REPAIRS & MAINTENANCE VEHICL	400.00	0.00	479.00	1,363.75	963.75-	340	----------!!!!
1393	TRAINING	350.00	0.00	0.00	0.00	350.00	0	
1553	HERBICIDES/STATE & CO ROW	2,500.00	0.00	0.00	1,485.00	1,015.00	59	-----
1823	LICENSE FEE	390.00	0.00	36.67	2,146.19	1,756.19-	550	----------!!!!
TOTAL:	WEED DEPARTMENT	43,642.00	0.00	3,901.43	28,654.89	14,987.11	65	------
TOTAL:	ROAD & BRIDGE FUND	2,383,596.00	0.00	192,238.15	1,319,225.48	1,064,370.52	55	-----

		ANNUAL REVISED BUDGET	ENCUMBERED	ACT MTD POSTED AND IN PROCESS	ACT YTD POSTED AND IN PROCESS	REMAINING BALANCE	PCT	
003	LODGING TAX TOURISM FUND							
48700	LODGING TAX TOURISM							
1210	OFFICE SUPPLIES	500.00	0.00	0.00	0.00	500.00	0	
1304	ADVERTISING AND PROMOTION	42,000.00	0.00	0.00	26,295.38	15,704.62	62	------
1320	TREASURER FEE	1,500.00	0.00	0.00	855.18	644.82	57	-----
1342	CONTRACT PAY/NO BENEFITS	0.00	0.00	0.00	1,100.00	1,100.00-	9999	----------!!!!
TOTAL:	LODGING TAX TOURISM	44,000.00	0.00	0.00	28,250.56	15,749.44	64	------
TOTAL:	LODGING TAX TOURISM FUND	44,000.00	0.00	0.00	28,250.56	15,749.44	64	------

Expenditure Guideline
FOR THE PERIOD(S) JAN 01, 2021 THROUGH JUL 31, 2021

		ANNUAL REVISED BUDGET	ENCUMBERED	ACT MTD POSTED AND IN PROCESS	ACT YTD POSTED AND IN PROCESS	REMAINING BALANCE	PCT	
004	SPECIAL PROJECT FUND							
45100	SPECIAL PROJECT FUND							
1348	FIESTA PARK	15,000.00	0.00	0.00	0.00	15,000.00	0	
1667	COG HOUSING GRANT	250,000.00	0.00	0.00	0.00	250,000.00	0	
1728	COURTHOUSE REHAB PHASE 1	400,000.00	0.00	0.00	0.00	400,000.00	0	
1735	NON CAPITAL OUTLAY	25,030.00	0.00	0.00	4,004.74	21,025.26	15	-
1766	CUCHARA MOUNTAIN PARK	10,000.00	0.00	0.00	0.00	10,000.00	0	
1780	CUCHARA MOUNTAIN PARK GRANT	241,532.00	0.00	2,750.00	11,500.00	230,032.00	4	
1811	ERTB GRANT	0.00	0.00	0.00	84,062.85	84,062.85-	9999	----------!!!!
1813	NEW JUDICIAL CENTER	0.00	0.00	44,174.14	853,977.22	853,977.22-	9999	----------!!!!
1828	LIVES EMPOWERED GRANT	85,000.00	0.00	966.80	36,224.76	48,775.24	42	----
1842	JAIL MOD/WALKWAY GRANT	0.00	0.00	81,947.69	275,412.36	275,412.36-	9999	----------!!!!
1849	FOX THEATRE WLSB CAP IMP PRG	400,000.00	0.00	0.00	0.00	400,000.00	0	
1850	DISPATCH CONSTRUCTION RESERV	650,000.00	0.00	0.00	0.00	650,000.00	0	
1851	COMPREHENSIVE PLAN GRANT	50,000.00	0.00	0.00	0.00	50,000.00	0	
1852	INDUSTRIAL PARK CAP PRGM	150,000.00	0.00	0.00	0.00	150,000.00	0	
1856	EMG SERVICE DISPATCH GRANT	0.00	0.00	0.00	44,228.35	44,228.35-	9999	----------!!!!
TOTAL:	SPECIAL PROJECT FUND	2,276,562.00	0.00	129,838.63	1,309,410.28	967,151.72	57	-----
TOTAL:	SPECIAL PROJECT FUND	2,276,562.00	0.00	129,838.63	1,309,410.28	967,151.72	57	-----

		ANNUAL REVISED BUDGET	ENCUMBERED	ACT MTD POSTED AND IN PROCESS	ACT YTD POSTED AND IN PROCESS	REMAINING BALANCE	PCT
005	RETIREMENT FUND						
46800	RETIREMENT						
1320	TREASURER FEE	4,800.00	0.00	90.33	3,405.58	1,394.42	70 -------
1344	CONTRIBUTIONS (RET)	181,331.00	0.00	14,620.88	101,551.91	79,779.09	56 -----
TOTAL:	RETIREMENT	186,131.00	0.00	14,711.21	104,957.49	81,173.51	56 -----
TOTAL:	RETIREMENT FUND	186,131.00	0.00	14,711.21	104,957.49	81,173.51	56 -----

		ANNUAL REVISED BUDGET	ENCUMBERED	ACT MTD POSTED AND IN PROCESS	ACT YTD POSTED AND IN PROCESS	REMAINING BALANCE	PCT	
050	CONSERVATION TRUST FUND							
47100	CONSERVATION TRUST							
1342	CONTRACT PAY/NO BENEFITS	10,000.00	0.00	2,000.00	6,000.00	4,000.00	60	------
1348	FIESTA PARK	0.00	0.00	192.83	1,195.32	1,195.32-	9999	----------!!!!
1380	REPAIRS/MAINTENANCE	0.00	0.00	0.00	46.95	46.95-	9999	----------!!!!
1388	LATHROP TRAIL	500.00	0.00	0.00	0.00	500.00	0	
1398	CAP. IMPROVE/MAINT PUB.	5,000.00	0.00	0.00	0.00	5,000.00	0	
TOTAL:	CONSERVATION TRUST	15,500.00	0.00	2,192.83	7,242.27	8,257.73	46	----
TOTAL:	CONSERVATION TRUST FUND	15,500.00	0.00	2,192.83	7,242.27	8,257.73	46	----

		ANNUAL REVISED BUDGET	ENCUMBERED	ACT MTD POSTED AND IN PROCESS	ACT YTD POSTED AND IN PROCESS	REMAINING BALANCE	PCT	
051	P.I.L.T.							
47200	PILT							
1310	PROFESSIONAL SERVICES	50,000.00	0.00	24,182.00	35,249.12	14,750.88	70	-------
1341	DUES (COG)	5,000.00	0.00	0.00	0.00	5,000.00	0	
1543	COUNTY FAIR	5,500.00	0.00	0.00	5,500.00	0.00	100	----------
1547	GARDNER RODEO ARENA PAINT	1,000.00	0.00	0.00	0.00	1,000.00	0	
1570	PREDATOR CONTROL	2,000.00	0.00	0.00	0.00	2,000.00	0	
1571	TRANSFER TO ROAD & BRIDGE	600,000.00	0.00	300,000.00	500,000.00	100,000.00	83	--------
1573	ACTION 22	350.00	0.00	0.00	0.00	350.00	0	
1617	TRANSFER TO CAP/OUTLAY FUND	50,000.00	0.00	0.00	0.00	50,000.00	0	
1687	COMMUNITY SERVICES	20,000.00	0.00	0.00	800.00	19,200.00	4	
1723	C CENTER/4H BLDG IMPROVEMENT	40,000.00	0.00	0.00	0.00	40,000.00	0	
1731	WALSENBURG RECYCLING	6,359.00	0.00	0.00	0.00	6,359.00	0	
1747	H/C WATER CONSERVANCY DIST	10,000.00	0.00	0.00	0.00	10,000.00	0	
1766	CUCHARA MOUNTAIN PARK	20,000.00	0.00	0.00	30.00	19,970.00	0	
1779	INDUSTRIAL PARK	30,000.00	0.00	0.00	0.00	30,000.00	0	
1781	ECONOMIC DEVELOPMENT	20,000.00	0.00	5,333.00	15,809.28	4,190.72	79	-------
1808	CONTRACT PAY (CMP)	10,000.00	0.00	0.00	0.00	10,000.00	0	
1858	COMMUNITY DEVELOPMENT	20,000.00	0.00	300.00	31,400.00	11,400.00-	157	----------!!!!
2000	CAPITAL OUTLAY	250,000.00	0.00	0.00	19,164.97	230,835.03	7	
TOTAL:	PILT	1,140,209.00	0.00	329,815.00	607,953.37	532,255.63	53	-----
TOTAL:	P.I.L.T.	1,140,209.00	0.00	329,815.00	607,953.37	532,255.63	53	-----

		ANNUAL REVISED BUDGET	ENCUMBERED	ACT MTD POSTED AND IN PROCESS	ACT YTD POSTED AND IN PROCESS	REMAINING BALANCE	PCT
062	FEDERAL FOREST PROJECT FUND						
48200							
1498	SEARCH AND RESCUE	10,000.00	0.00	0.00	0.00	10,000.00	0
1805	TITLE III (FIREWISE PROGRAM)	29,331.00	0.00	3,382.50	4,095.00	25,236.00	13 -
TOTAL:		39,331.00	0.00	3,382.50	4,095.00	35,236.00	10 -
TOTAL:	FEDERAL FOREST PROJECT FUND	39,331.00	0.00	3,382.50	4,095.00	35,236.00	10 -

		ANNUAL REVISED BUDGET	ENCUMBERED	ACT MTD POSTED AND IN PROCESS	ACT YTD POSTED AND IN PROCESS	REMAINING BALANCE	PCT
065	CORRECTIONAL/FAC ENTERPRISE						
48600							
1303	AUDITOR	25.00	0.00	0.00	0.00	25.00	0
1353	DEPRECIATION	11,008.00	0.00	0.00	0.00	11,008.00	0
TOTAL:	CORRECTIONAL/FAC ENTERPRISE	11,033.00	0.00	0.00	0.00	11,033.00	0

		ANNUAL REVISED BUDGET	ENCUMBERED	ACT MTD POSTED AND IN PROCESS	ACT YTD POSTED AND IN PROCESS	REMAINING BALANCE	PCT	
066	PUBLIC WELFARE FUND							
48800	PUBLIC WELFARE FUND							
1110	SALARIES (EMP)	0.00	0.00	98,058.15	679,321.65	679,321.65-	9999	----------!!!!
1161	OASI (EMP)	0.00	0.00	6,079.51	42,117.59	42,117.59-	9999	----------!!!!
1162	MEDICARE (EMP)	0.00	0.00	1,421.92	9,850.35	9,850.35-	9999	----------!!!!
1164	INSURANCE(HEA/RML)	0.00	0.00	14,610.25	120,556.61	120,556.61-	9999	----------!!!!
1165	INSURANCE (DENTAL)	0.00	0.00	1,240.05	9,835.00	9,835.00-	9999	----------!!!!
1168	INSURANCE (LIFE)	0.00	0.00	10.00	70.00	70.00-	9999	----------!!!!
1447	UNEMPLOYMENT TAX	0.00	0.00	868.24	2,626.81	2,626.81-	9999	----------!!!!
TOTAL:	PUBLIC WELFARE FUND	0.00	0.00	122,288.12	864,378.01	864,378.01-	9999	----------!!!!
TOTAL:	PUBLIC WELFARE FUND	0.00	0.00	122,288.12	864,378.01	864,378.01-	9999	----------!!!!

Expenditure Guideline
FOR THE PERIOD(S) JAN 01, 2021 THROUGH JUL 31, 2021

		ANNUAL REVISED BUDGET	ENCUMBERED	ACT MTD POSTED AND IN PROCESS	ACT YTD POSTED AND IN PROCESS	REMAINING BALANCE	PCT	
068	WTS ENTERPRISE							
40800	WASTE TRANSFER STATION							
1110	SALARIES (EMP)	21,056.00	0.00	1,929.07	8,838.57	12,217.43	41	----
1161	OASI (EMP)	1,305.00	0.00	119.60	547.99	757.01	41	----
1162	MEDICARE (EMP)	305.00	0.00	27.97	128.15	176.85	42	----
1210	OFFICE SUPPLIES	50.00	0.00	192.16	192.16	142.16-	384	----------!!!!
1220	OPERATING SUPPLIES	1,000.00	0.00	18.79	18.79	981.21	1	
1301	PROP & CASUALTY INS	2,537.00	0.00	0.00	3,125.71	588.71-	123	----------!!
1303	AUDITOR	124.00	0.00	0.00	0.00	124.00	0	
1310	PROFESSIONAL SERVICES	200.00	0.00	14.99	1,649.13	1,449.13-	824	----------!!!!
1320	TREASURER FEE	769.00	0.00	88.28	493.73	275.27	64	------
1321	TELEPHONE	650.00	0.00	0.00	0.00	650.00	0	
1335	FUEL REIMBURSEMENT	11,000.00	0.00	2,304.70	7,648.09	3,351.91	69	------
1370	UTILITIES	2,600.00	0.00	229.80	2,468.58	131.42	94	---------
1380	REPAIRS/MAINTENANCE	1,000.00	0.00	0.00	304.30	695.70	30	---
1446	CWCP	3,721.00	0.00	0.00	2,694.00	1,027.00	72	-------
1447	UNEMPLOYMENT TAX	50.00	0.00	13.18	34.31	15.69	68	------
1457	CELLULAR SERVICE	615.00	0.00	51.46	555.00	60.00	90	---------
1507	CONTRACTED REPAIRS	500.00	0.00	0.00	0.00	500.00	0	
1651	TIPPING FEE	35,000.00	0.00	4,256.76	17,039.96	17,960.04	48	----
1790	PPE'S	500.00	0.00	0.00	0.00	500.00	0	
1855	E WASTE (WTS)	0.00	0.00	823.55	3,101.65	3,101.65-	9999	----------!!!!
2000	CAPITAL OUTLAY	10,000.00	0.00	0.00	0.00	10,000.00	0	
TOTAL:	WASTE TRANSFER STATION	92,982.00	0.00	10,070.31	48,840.12	44,141.88	52	-----
TOTAL:	WTS ENTERPRISE	92,982.00	0.00	10,070.31	48,840.12	44,141.88	52	-----

		ANNUAL REVISED BUDGET	ENCUMBERED	ACT MTD POSTED AND IN PROCESS	ACT YTD POSTED AND IN PROCESS	REMAINING BALANCE	PCT	
069	EMERG/SERVICE FUND 0028.9100							
42100	EMERGENCY MANAGEMENT							
1110	SALARIES (EMP)	156,815.00	0.00	13,067.92	85,126.69	71,688.31	54	-----
1161	OASI (EMP)	9,723.00	0.00	810.22	5,277.91	4,445.09	54	-----
1162	MEDICARE (EMP)	2,274.00	0.00	189.50	1,234.43	1,039.57	54	-----
1164	INSURANCE(HEA/RML)	36,760.00	0.00	2,639.18	17,244.58	19,515.42	46	----
1165	INSURANCE (DENTAL)	1,917.00	0.00	171.40	1,125.20	791.80	58	-----
1210	OFFICE SUPPLIES	250.00	0.00	21.99	21.99	228.01	8	
1220	OPERATING SUPPLIES	1,000.00	0.00	0.00	922.56	77.44	92	---------
1310	PROFESSIONAL SERVICES	0.00	0.00	1,500.00	11,500.00	11,500.00-	9999	----------!!!!
1321	TELEPHONE	500.00	0.00	0.00	0.00	500.00	0	
1330	TRAVEL & TRANSPORTATION	2,000.00	0.00	0.00	0.00	2,000.00	0	
1335	FUEL REIMBURSEMENT	3,500.00	0.00	0.00	61.10	3,438.90	1	
1336	DEPARTMENT UNIFORMS	200.00	0.00	0.00	0.00	200.00	0	
1350	PRINTING	1,000.00	0.00	0.00	0.00	1,000.00	0	
1393	TRAINING	3,000.00	0.00	0.00	0.00	3,000.00	0	
1457	CELLULAR SERVICE	1,000.00	0.00	120.66	742.17	257.83	74	-------
1500	EQUIPMENT	5,000.00	0.00	1,700.00	6,094.80	1,094.80-	121	----------!!
1772	DISASTER SUPPLIES	5,000.00	0.00	0.00	0.00	5,000.00	0	
1862	SMALL DOLLAR GRANT	0.00	0.00	4,878.02	4,878.02	4,878.02-	9999	----------!!!!
2000	CAPITAL OUTLAY	30,000.00	0.00	0.00	0.00	30,000.00	0	
TOTAL:	EMERGENCY MANAGEMENT	259,939.00	0.00	25,098.89	134,229.45	125,709.55	51	-----
49000	EMERGENCY SERVICES FUND							
1110	SALARIES (EMP)	311,395.00	0.00	25,927.48	180,607.62	130,787.38	57	-----
1161	OASI (EMP)	19,307.00	0.00	1,607.52	11,197.76	8,109.24	57	-----
1162	MEDICARE (EMP)	4,399.00	0.00	375.92	2,618.65	1,780.35	59	-----
1164	INSURANCE(HEA/RML)	71,105.00	0.00	6,102.56	42,430.80	28,674.20	59	-----
1165	INSURANCE (DENTAL)	4,276.00	0.00	361.41	2,511.26	1,764.74	58	-----
1210	OFFICE SUPPLIES	1,750.00	0.00	0.00	0.00	1,750.00	0	
1220	OPERATING SUPPLIES	12,250.00	0.00	328.52	11,575.80	674.20	94	---------
1301	PROP & CASUALTY INS	5,750.00	0.00	0.00	9,829.55	4,079.55-	170	----------!!!!
1303	AUDITOR	4,800.00	0.00	0.00	0.00	4,800.00	0	
1310	PROFESSIONAL SERVICES	9,000.00	0.00	0.00	0.00	9,000.00	0	
1320	TREASURER FEE	26,000.00	0.00	2,341.44	16,019.01	9,980.99	61	------
1321	TELEPHONE	4,100.00	0.00	743.09	2,785.11	1,314.89	67	------
1330	TRAVEL & TRANSPORTATION	1,500.00	0.00	0.00	22.15	1,477.85	1	
1335	FUEL REIMBURSEMENT	600.00	0.00	0.00	36.89	563.11	6	
1336	DEPARTMENT UNIFORMS	900.00	0.00	0.00	0.00	900.00	0	
1347	TRANSFER TO CO GENERAL FUND	150,000.00	0.00	0.00	0.00	150,000.00	0	
1370	UTILITIES	9,300.00	0.00	0.00	3,465.38	5,834.62	37	---
1380	REPAIRS/MAINTENANCE	2,000.00	0.00	67.62	1,343.52	656.48	67	------
1393	TRAINING	7,000.00	0.00	0.00	2,732.07	4,267.93	39	---
1446	CWCP	7,400.00	0.00	0.00	193.00	7,207.00	2	
1447	UNEMPLOYMENT TAX	865.00	0.00	350.95	961.11	96.11-	111	----------!
1457	CELLULAR SERVICE	2,050.00	0.00	522.29	947.07	1,102.93	46	----
1617	TRANSFER TO CAP/OUTLAY FUND	400,000.00	0.00	0.00	400,000.00	0.00	100	----------

		ANNUAL REVISED BUDGET	ENCUMBERED	ACT MTD POSTED AND IN PROCESS	ACT YTD POSTED AND IN PROCESS	REMAINING BALANCE	PCT
069	EMERG/SERVICE FUND 0028.9100						
49000	EMERGENCY SERVICES FUND						
1669	RADIO LICENSING	280.00	0.00	0.00	0.00	280.00	0
1677	PAYMENT TO CGF (RENT/UTIL)	5,000.00	0.00	0.00	0.00	5,000.00	0
1679	TOWER MAINTENANCE	5,000.00	0.00	0.00	0.00	5,000.00	0
1719	COMPUTER SOFTWARE	2,500.00	0.00	0.00	0.00	2,500.00	0
1720	COMPUTER HARDWARE	20,000.00	0.00	0.00	0.00	20,000.00	0
1740	VEHICLE EXPENSE	2,000.00	0.00	0.00	0.00	2,000.00	0
2000	CAPITAL OUTLAY	25,000.00	0.00	0.00	0.00	25,000.00	0
TOTAL:	EMERGENCY SERVICES FUND	1,115,527.00	0.00	38,728.80	689,276.75	426,250.25	61 ------
TOTAL:	EMERG/SERVICE FUND 0028.9100	1,375,466.00	0.00	63,827.69	823,506.20	551,959.80	59 -----

		REVISED ANNUAL BUDGET	ENCUMBERED	ACT MTD POSTED AND IN PROCESS	ACT YTD POSTED AND IN PROCESS	REMAINING BALANCE	PCT	
070	GARDNER PID 0045.9100							
49100	GARDNER PUBLIC IMP DISTRICT							
1110	SALARIES (EMP)	18,445.00	0.00	1,537.06	10,734.42	7,710.58	58	-----
1161	OASI (EMP)	1,144.00	0.00	95.30	665.55	478.45	58	-----
1162	MEDICARE (EMP)	267.00	0.00	22.28	155.60	111.40	58	-----
1164	INSURANCE(HEA/RML)	6,760.00	0.00	563.80	3,946.60	2,813.40	58	-----
1165	INSURANCE (DENTAL)	464.00	0.00	38.72	271.04	192.96	58	-----
1210	OFFICE SUPPLIES	2,025.00	0.00	0.00	59.91	1,965.09	2	
1220	OPERATING SUPPLIES	1,400.00	0.00	10.89	1,282.21	117.79	91	---------
1303	AUDITOR	273.00	0.00	0.00	0.00	273.00	0	
1310	PROFESSIONAL SERVICES	11,000.00	0.00	120.00	4,540.80	6,459.20	41	----
1320	TREASURER FEE	850.00	0.00	80.99	513.85	336.15	60	------
1321	TELEPHONE/BULK WATER STATION	930.00	0.00	84.55	592.81	337.19	63	------
1330	TRAVEL & TRANSPORTATION	200.00	0.00	0.00	0.00	200.00	0	
1342	CONTRACT PAY/NO BENEFITS	3,000.00	0.00	0.00	0.00	3,000.00	0	
1370	UTILITIES	10,000.00	0.00	706.24	7,180.78	2,819.22	71	-------
1380	REPAIRS/MAINTENANCE	10,000.00	0.00	0.00	1,232.69	8,767.31	12	-
1393	TRAINING	500.00	0.00	0.00	6,029.04	5,529.04-	1205	----------!!!!
1420	DUES & MEETINGS	0.00	0.00	0.00	175.00	175.00-	9999	----------!!!!
1447	UNEMPLOYMENT TAX	62.00	0.00	13.83	41.57	20.43	67	------
1457	CELLULAR PHONE SERVICE	710.00	0.00	51.45	337.69	372.31	47	----
1592	INSUFFICIENT FUNDS	75.00	0.00	0.00	0.00	75.00	0	
1688	AUGMENTATION WATER	39,347.00	0.00	0.00	0.00	39,347.00	0	
1691	TESTING	6,000.00	0.00	280.00	2,435.00	3,565.00	40	----
1727	BULK WATER FILL STATION	1,500.00	0.00	0.00	0.00	1,500.00	0	
1751	WATER SERVICE DEPOSIT REFUND	120.00	0.00	0.00	0.00	120.00	0	
1764	BULK WATER REFUND	0.00	0.00	0.00	413.77	413.77-	9999	----------!!!!
1793	UTILITY LOCATES	25.00	0.00	0.00	13.20	11.80	52	-----
1827	STATE PERMITS	1,000.00	0.00	0.00	0.00	1,000.00	0	
1839	GARDNER WTR SYS EMG GRANT	85,402.00	0.00	16,183.12	28,128.42	57,273.58	32	---
2000	CAPITAL OUTLAY	7,800.00	0.00	0.00	0.00	7,800.00	0	
TOTAL:	GARDNER PUBLIC IMP DISTRICT	209,299.00	0.00	19,788.23	68,749.95	140,549.05	32	---
TOTAL:	GARDNER PID 0045.9100	209,299.00	0.00	19,788.23	68,749.95	140,549.05	32	---

Expenditure Guideline
FOR THE PERIOD(S) JAN 01, 2021 THROUGH JUL 31, 2021

		REVISED ANNUAL BUDGET	ENCUMBERED	ACT MTD POSTED AND IN PROCESS	ACT YTD POSTED AND IN PROCESS	REMAINING BALANCE	PCT	
071	DISASTER RECOVERY FUND							
49100								
1320	TREASURER FEE	850.00	0.00	0.00	0.00	850.00	0	
50000	DISASTER RECOVERY FUND							
1320	TREASURER FEE	0.00	0.00	0.00	5.00	5.00-	9999	----------!!!!
1648	TRANSFER TO PILT FUND	553,973.00	0.00	0.00	553,973.00	0.00	100	----------
1795	FLOOD GAUGE PROJECT GRANT	0.00	0.00	0.00	14,710.29	14,710.29-	9999	----------!!!!
1835	COVID 19 (SUPPLIES)	0.00	0.00	0.00	925.68	925.68-	9999	----------!!!!
1857	DOLA SMALL BUS RECOVRY GRANT	0.00	0.00	0.00	130,297.00	130,297.00-	9999	----------!!!!
TOTAL:	DISASTER RECOVERY FUND	553,973.00	0.00	0.00	699,910.97	145,937.97-	126	----------!!
TOTAL:	DISASTER RECOVERY FUND	554,823.00	0.00	0.00	699,910.97	145,087.97-	126	----------!!

Expenditure Guideline
FOR THE PERIOD(S) JAN 01, 2021 THROUGH JUL 31, 2021

	ANNUAL REVISED BUDGET	ENCUMBERED	ACT MTD POSTED AND IN PROCESS	ACT YTD POSTED AND IN PROCESS	REMAINING BALANCE	PCT
GRAND TOTAL	14,726,464.00	0.00	1,414,073.63	9,555,853.32	5,170,610.68	64 ------

TOTAL NUMBER OF RECORDS PRINTED 528

THE PRECEDING EXPENDITURE REPORT WAS REVIEWED AND APPROVED.

DATE _____ APPROVED BY _____

_____

_____

HUERFANO COUNTY

GREEN SHEET/STATUS CHANGE

EFFECTIVE DATE
8/23/2021
9/15/2021

NAME: **Name: Justin Novak** PAYROLL :

CHANGE OF ADDRESS/ PHONE	
STREET	
CITY, STATE, ZIP	
TELEPHONE	

CHANGE	FROM (DOES NOT APPLY TO NEW EMPLOYEE)	TO
JOB TITLE		Detention Officer
DEPARTMENT		Sheriff Jail
HOURS		
ANNUAL SALARY		$30,000.00
SEMI-MONTHLY SALARY		
HOURLY SALARY		
OTHER SALARY		Non -Exempt

REASON FOR CHANGE

NEW HIRE	RESIGNATION	LENGTH OF SERVICE INCREASE
REHIRED	RETIREMENT	REEVALUATION OF CURRENT JOB
PROMOTION	LAYOFF	INTRODUCTORY PERIOD COMPLETED
DEMOTION	ADMINISTRATIVE LEAVE PAID	OTHER
TRANSFER	ADMINISTRATIVE LEAVE UN-PAID	

COMMENTS, IF NECESSARY

Motion to hire Justin Novak contingent upon satisfactory completion of a CBI background check, and a drug screen with a negative result.

I _____Melva Zagar_____HR Coordinator certify that the above presented information has been requested by the Department Head and or Elected Official directly responsible for the employee named within. I certify that I have received all proper documentaion and that I have entered the information on the Green Sheet to reflect the change as requested.

__Melva Zagar____8-16-2021_____

Gerald A. Cisneros, Chairman

John Galusha, Vice-Chairman

Arica Andreatta, Commissioner

Date

Date to Finance Office:

Action Items	
	August 17,2021
ITEM	**SUBJECT**
Accessory Building Waiver Request	Richard Schubert
COSI Scholarship Invoice	Adams State University
Purchase & Sale of Real Property Agreement	Gardner Development Project
Eaton Sales & Services Subscription Agreement	Fuel Management System
HCCC Fee Waiver Request	SP Harp Retreat

Huerfano County Land Use Department
400 Main Street, Suite B, Walsenburg, Colorado 81089
Office: 719-738-1220, ext. 117
To Request an Inspection: 719-738-1220, ext. 104

BUILDING PERMIT APPLICATION

PROPERTY OWNER'S INFORMATION:

Name: Richard Schubert
Mailing Address: 7415 Templeton Gap
City, State, Zip: Colo Springs, Co 80923
Phone No. 1/ 2: 719-233-6758
E-Mail Address: Ricks@lo.aol.com

CONTRACTOR'S INFORMATION:

Name:
Mailing Address:
City, State, Zip:
Phone No. 1 / 2: /
E-Mail Address:

TYPE:
- [x] New construction
- [ ] Remodel
- [ ] Addition
- [ ] Demolition
- [ ] In kind replacement
- [ ] Extension of building permit

OCCUPANCY:
- [ ] Site built residential
- [ ] Manufactured residential
- [ ] Residential accessory building
- [ ] Commercial
- [x] Agricultural
- [ ] Industrial

INTENDED USE:
- [ ] Single or multi family dwelling
- [ ] Residential garage
- [x] Agricultural animal husbandry
- [ ] Commercial (give details in comments)
- [ ] Industrial (give details in comments)
- [ ] Storage (note stored materials in comments)

COMMENTS (OTHER / MISC):

HOA/POA has reviewed and approves of the proposed construction. HOA Representative:
THIS PROPERTY IS NOT LOCATED IN AN HOA / POA. APPLICANT'S SIGNATURE:
APPLICANT'S SIGNATURE: **SUBMITTAL DATE:** 8-5-21

BELOW THIS LINE FOR USE BY BUILDING DEPARTMENT ONLY

GENERAL INFORMATION:

Property Owner name:
Subdivision / Sec,Tw, Rg:
Lot & filing or ¼ section:
County Schedule No: Subdivision No:
County Zoning District: Region:
Property Address:
Nearest P.O.:

OTHER REQUIRED PERMITS:
- [ ] Conditional use
- [ ] Variance
- [ ] Temporary resident
- [ ] Temporary use
- [ ] H.B. 1041 Development
- [ ] Sanitation Permit
- [ ] Others:
- [ ] County road access
- [ ] H.B. 1041 Flood Plain
- [ ] Sign permit
- [ ] State electrical
- [ ] State plumbing
- [ ] Lot consolidation

OCCUPANCY:	*BUILDING SIZE: (SQUARE FEET)*	*COST OF BUILDING (PER SQUARE FEET)*	*VALUATION:*
		TOTAL VALUATION:	
		FEE MODIFIER:	*x 0.0115*
		PERMIT FEE:	

BUILDING PERMIT FEES:

Permit Fee:
Plan Review Fee:
TOTAL PERMIT FEE:

PAYMENT OF FEES:
COUNTY RECEIPT NO:
PERSONAL CHECK NO:

APPROVAL:
HUERFANO COUNTY BUILDING INSPECTOR **DATE:**

COUNTY BUILDING PERMIT NO:

PRIMARY OCCUPANCY CLASS:

TYPE OF CONSTRUCTION:

Huerfano County Land Use Department
400 Main Street, Suite B, Walsenburg, Colorado 81089
Office: 719-738-1220, ext. 117
To Request an Inspection: 719-738-1220, ext. 104

BUILDING PERMIT APPLICATION

ZONING INFORMATION:

ACREAGE: 281 ZONING: _____

REQUIRED SETBACKS: FRONT _____ SIDE _____ REAR _____

SFHA? _____ AIRPORT OVERLAY: _____ WITHIN 3 MILES OF CITY/TOWN? _____

PRIMARY STRUCTURE? _____ TYPE: _____

ACCESSORY STRUCTURE: _____ (EXISTING RESIDENCE OR PRIMARY STRUCTURE? YES OR NO)

AG STRUCTURE? _____ CONSTRUCTION TYPE: _____

EXEMPT? YES OR NO

STAFF COMMENTS:

_____

_____

_____

_____

APPROVED _____ DENIED _____

_____

STAFF SIGNATURE DATE

Perspective View

Front

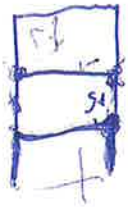

Left Side

Right Side

Back

1000 Sqft

Building Guide

Colorado Chapter of the International Code Council

Pole Barn Construction

How to Use this Guide

Provide two sets of plans and complete the following:

1. Complete this Building Guide by filling in the blanks on all pages, and indicating which construction details will be used.

2. Provide 2 Plot Plans (site plan) showing dimensions of your project or addition and its relationship to existing buildings or structures on the property and the distance to existing property lines drawn to scale.

3. Fill out a Building Permit Application.

The majority of permit applications are processed with little delay. The submitted documents will help determine if the project is in compliance with building safety codes, zoning ordinances and other applicable laws.

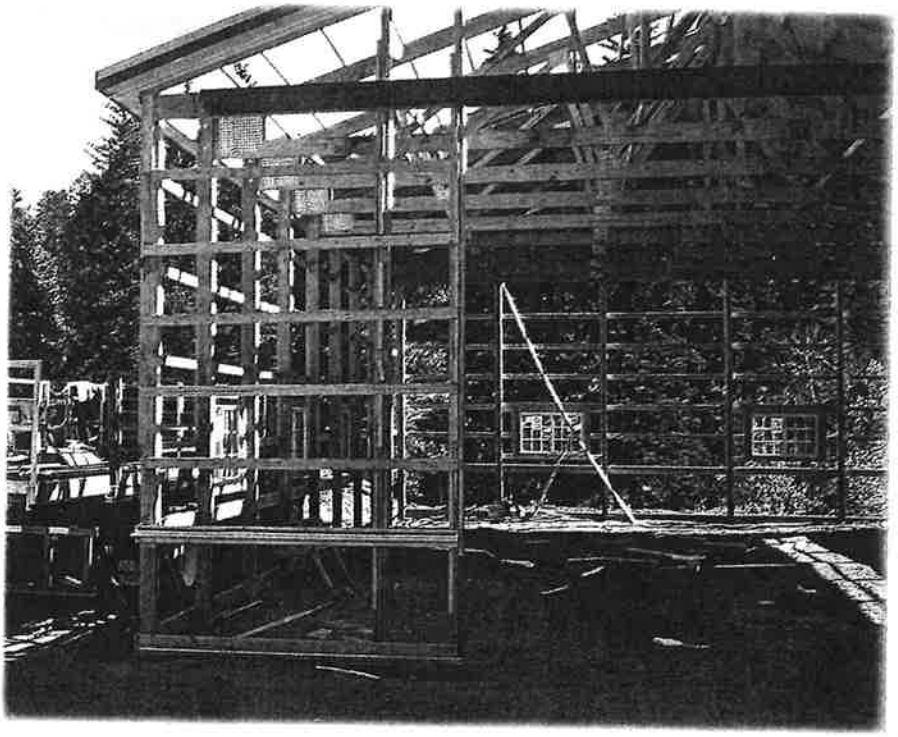

The Colorado Chapter of the International Code Council is a professional organization seeking to promote the public health, safety and welfare to building construction. We appreciate your feedback and suggestions. To obtain a master copy of this building guide, please write to the Colorado Chapter of the International Code Council, P.O. Box 961, Arvada, CO 80001.
http://www.coloradochaptericc.org

This handout was developed by the Colorado Chapter of the International Code Council as a basic plan submittal under the 2006 International Residential Code. It is not intended to cover all circumstances. Check with your Department of Building Safety for additional requirements.

Pole Barn Construction

End Elevation

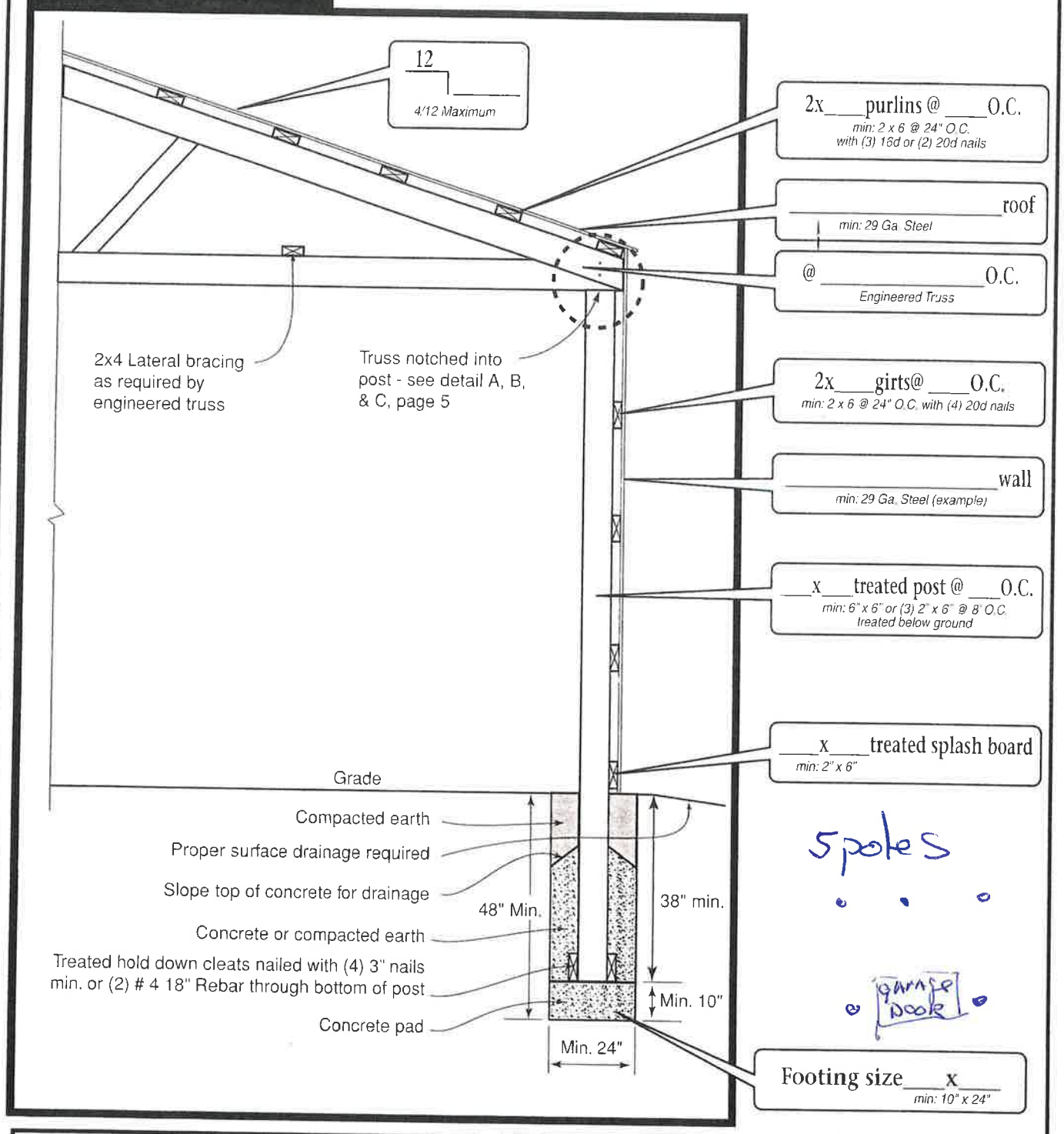

This handout was developed by the Colorado Chapter of the International Code Council as a basic plan submittal under the 2006 International Residential Code. It is not intended to cover all circumstances. Check with your Department of Building Safety for additional requirements.

Pole Barn Construction

Side Elevation

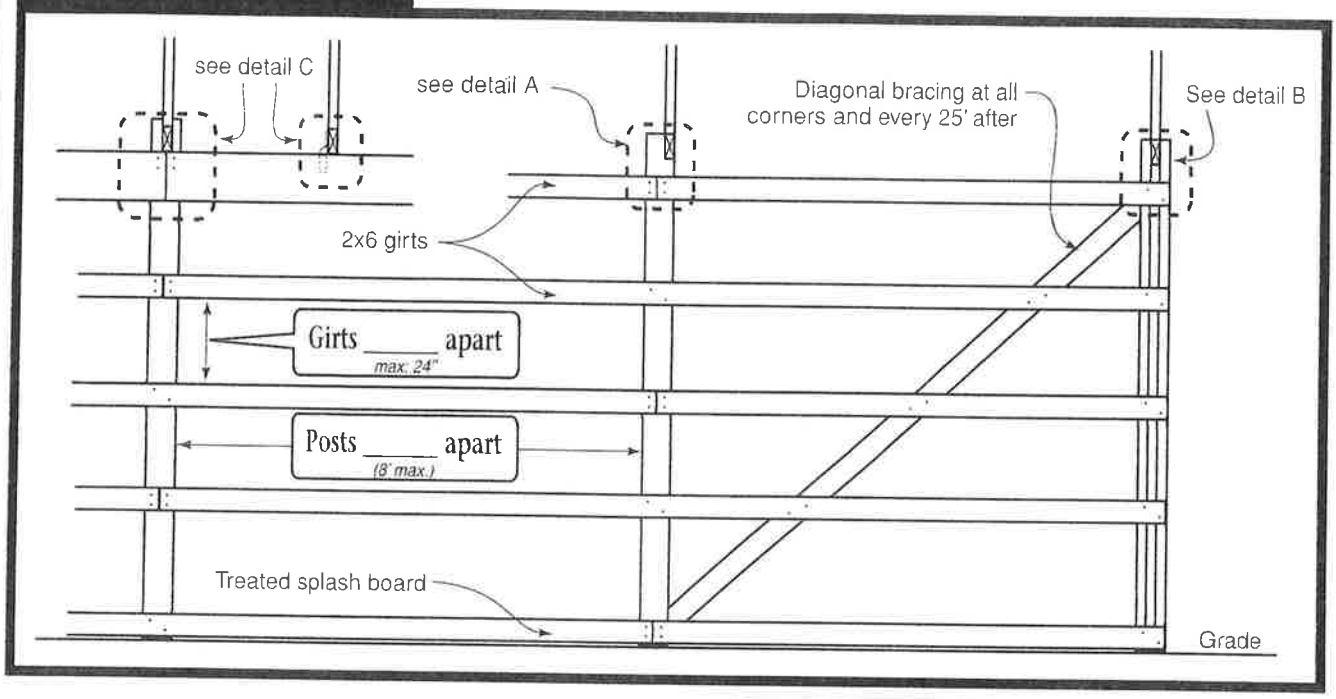

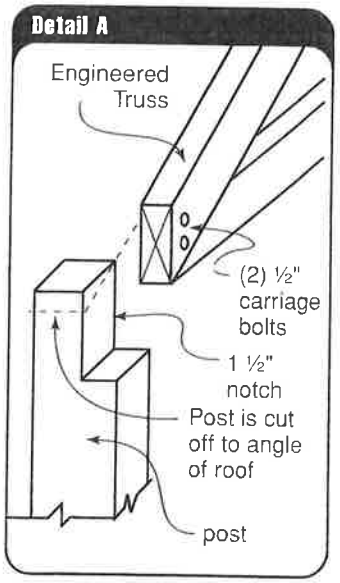

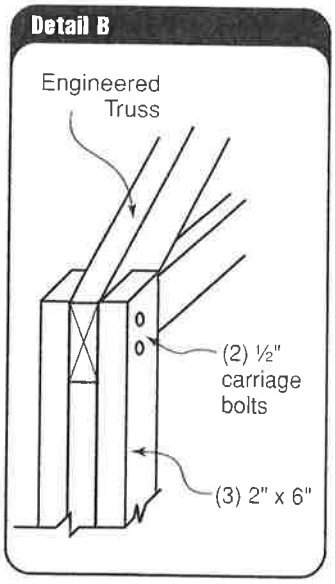

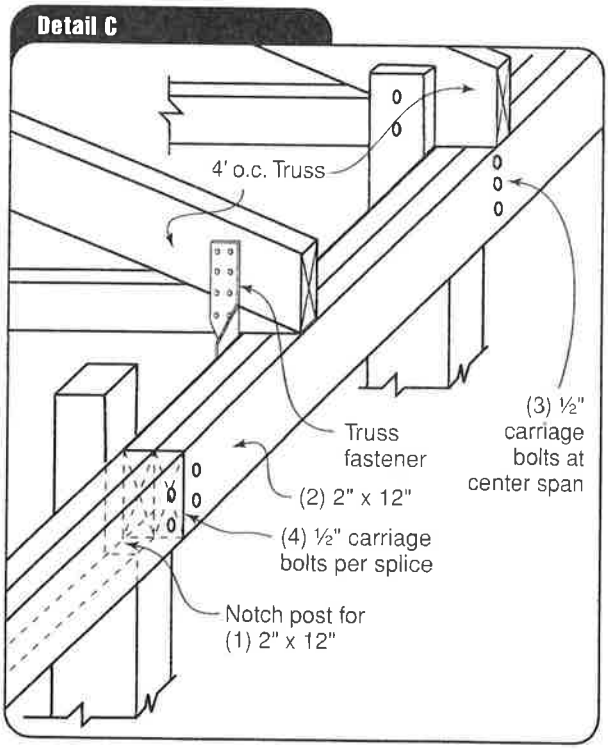

This handout was developed by the Colorado Chapter of the International Code Council as a basic plan submittal under the 2006 International Residential Code. It is not intended to cover all circumstances. Check with your Department of Building Safety for additional requirements.

ADAMS STATE UNIVERSITY
COLORADO
Great Stories Begin Here
FOUNDATION

August 10, 2021

Huerfano County
401 Main St #201
Walsenburg, CO 81089

INVOICE

COSI County Scholarships for 2021-2022	$3,356.00

Thank you!

Check Payable to:
Adams State University Foundation
208 Edgemont Blvd
Alamosa, CO 81101

AGREEMENT FOR THE PURCHASE AND SALE OF REAL PROPERTY

This Agreement for the Purchase and Sale of Real Property is entered into by and between the Archuleta Living Trust, Louis L. Archuleta, and Constance I. Archuleta, Trustees, (hereinafter referred to as "Seller") and Huerfano County, Colorado, a body corporate and a political subdivision, formed pursuant to the laws of the State of Colorado, (hereinafter referred to as "Purchaser").

WITNESSETH for and in consideration of the mutual promises, terms, covenants, and conditions set forth herein, Purchaser and Seller hereby agree as follows:

1. PROPERTY.

Subject to all of the terms, conditions, and covenants hereinafter set forth, Seller agrees to sell to Purchaser, and Purchaser agrees to purchase from Seller the following described real property together with all improvements located thereon, if any, and situate in the County of Huerfano, State of Colorado and more particularly described as:

> Lot 4 (SW ¼ SW ¼), Section 18, Township 26 South, Range 69 West, 6th P.M., County of Huerfano, State of Colorado, excepting therefrom five (5.00) acres previously transferred to Gardener Fair Association and, further, excepting therefrom a tract of land located in said Lot 4 (SW ¼ SW ¼) being more particularly described as follows: Beginning at a point on the South line of said Section 18, from which the Southwest corner of said Section bears: N 87° 44' 57" W, 655.14 feet; thence N 01° 32' 10" W, 210 feet; thence S 87° 45' 05" E, and parallel to the South line of said Section 18 622.28 feet; thence S 00° 41' 32" W, 210 feet, to the South line of said Section 18; thence N 87° 45' 05" W, along said South line of said Section 18, 622.28 feet to the point of beginning, containing 3 acres.
>
> Said Property, the exceptions therefrom, and certain off-record matters, are depicted on that certain Land Survey Plat for Constance Archuleta prepared by Daniel L. Wachob dated May 25, 2015. A true and accurate copy of said Land Survey Plat is attached hereto and incorporated herein by this reference labeled **Exhibit A.**

The real property and improvements, if any, located thereon may hereinafter be referred to as the "Property" or "Subject Property".

Inclusions:

If attached to the Property on the date of this Agreement, the following items are included unless excluded under **Exclusions**: Any fixtures attached or appurtenant to

the Property on the date of this Agreement and any unattached personal property are included.

Exclusions:

NONE

2. PRICE AND TERMS.

Price for the real property and included improvements, if any, to be conveyed by Seller to Purchaser is NINETY THOUSAND DOLLARS ($90,000.00) to be paid as follows:

a. The sum of ONE THOUSAND DOLLARS ($1,000.00) represents and is earnest money and part payment of the purchase price. The earnest money shall be payable to and held by Dotter Abstract Company, Inc., 506 Main St., Walsenburg, CO 81089, for deposit in its trust account on behalf of both Seller and Purchaser.

b. The balance of the purchase price in the amount of EIGHTY-NINE THOUSAND DOLLARS ($89,000.00) shall be paid by Purchaser to Seller at Closing in cash or certified funds.

All amounts paid by Purchaser at Closing, including cash at closing, plus Purchaser's share of the closing costs, shall be in funds which comply with Colorado law, i.e., cash, electronic transfer funds, Huerfano County Government Warrant, certified check, savings and loan teller's check and/or cashier's check.

3. DATES AND DEADLINES.

Item Number	Reference	Event	Date or deadline
1	Sec. 15	Acceptance Deadline	August 17, 2021
2	Sec. 2	Earnest Money Deadline	Three days following MEC
3	Sec. 4	Record Title Deadline	August 27, 2021
4	Sec. 4	Record Title Objection Deadline	September 3, 2021
5	Sec. 4	Off-Record Title Matters Deadline	August 27, 2021
6	Sec. 4	Off-Record Title Matters Objection Deadline	September 3, 2021
7	Sec.4	Title Objection Resolution Deadline	September 10, 2021
8	Sec.5	Seller's Property Disclosure Deadline	August 27, 2021

9	**Sec. 5**	**Inspection Objection Deadline**	**September 17, 2021**
10	**Sec. 5**	**Inspection Objection Resolution Deadline**	**September 20, 2021**
11	**Sec. 16**	**Closing**	**September 23, 2021**
12	**Sec. 9**	**Possession**	**September 23, 2021**

The abbreviation "MEC" (Mutual Execution of this Contract) means the last date upon which both parties have signed this Agreement. No separate date or deadline has been stated for a survey of the property. In the event Purchaser desires to obtain a Survey of the Property, then Purchaser may do so at its expense as part of its Inspection of the Property and any objection based upon the Survey shall be due from Purchaser on or before the Inspection Objection Deadline, and a resolution of such objection, if any, shall be reached on or before the Inspection Objection Resolution Deadline.

4. TITLE.

Subject to the provisions of Subsections (b) and (c) below, title shall be merchantable in the Seller and free and clear of all liens and encumbrances except 1) rights of way, easements, covenants, plats, agreements and other restrictions of record; 2) any claim or other matter arising out of or related to the disclosure by Seller of off record title matters as disclosed in subsection(e) below and/or in Seller's further disclosures made pursuant to subsection (e) below; 3) the lien for property taxes and special assessments, if any, for the current year.

a. Evidence of Title. On or before the **Record Title Deadline** Seller shall cause to be furnished to Purchaser, at Seller's expense, a current commitment for an owner's title insurance policy on the subject property in an amount equal to the purchase price. The title insurance commitment so furnished may, at Purchaser's election, commit to delete or insure over the printed or standard exceptions in such title commitment which relate to: 1) parties in possession; 2) unrecorded easements; 3) survey matters; 4) unrecorded mechanics liens; 5) GAP period matters (date of commitment to date of deed recording); and 6) unpaid taxes, assessments and unredeemed tax sales prior to the year of closing. Purchaser shall be responsible for payment of any additional expense to obtain this additional coverage. Dotter Abstract Company shall cause the title insurance policy to be delivered to Purchaser at or as soon as practicable after Closing.

b. Copies of Exceptions. On or before the **Record Title Deadline**, Dotter Abstract Company shall furnish to Purchaser and Seller a copy of any plats,

declarations, covenants, conditions and restrictions burdening the property as are listed in the Schedule of Exceptions on the title insurance commitment.

c. Title Review. Purchaser shall have the right to inspect the title insurance commitment and related documents as furnished by Dotter Abstract Company. Written notice by Purchaser of the unmerchantability of title or of any other unsatisfactory title condition shown by the title insurance commitment and related documents shall be signed by or on behalf of Purchaser and given to Seller on or before the **Record Title Objection Deadline** or within seven (7) calendar days after receipt by Purchaser of any title commitment or endorsement adding new exceptions to the title commitment together with a copy of such title document adding said new exception to title. In the event that Seller does not receive Purchaser's notice by the date specified above, then Purchaser accepts the condition of title as disclosed by the title insurance commitment and related documents as being satisfactory.

d. Matters not shown by the Public Records. Seller shall deliver to Purchaser on or before the **Off-Record Title Matters Deadline** true copies of all leases and surveys in Seller's possession pertaining to the property and shall disclose to Purchaser all easements, liens or other title matters not shown by the public records of which Seller has actual knowledge. Purchaser shall have the right to inspect the property to determine if any third party has any right in the property not shown by the public records. Written notice of any unsatisfactory condition or conditions disclosed by Seller or revealed by such inspection shall be signed by or on behalf of Purchaser and given to Seller on or before the **Off-Record Title Matters Objection Deadline.** In the event that Seller does not receive Purchaser's notice by said date, then Purchaser accepts title subject to such rights, if any, of third parties of which Purchaser has actual knowledge or of which Purchaser has constructive knowledge, such being matters that could have been discovered with the excise of reasonable inquiry.

e. Seller Disclosure of Certain Off Record Title Matters. Pursuant to subsection (d) above, Seller hereby discloses to Purchaser that those certain "Area(s) of Possible Conflict" as identified on **Exhibit A** hereto may be the subject of a claim or claims to title to a portion of the Property by a third party or parties. Seller hereby represents that as of the date of this Agreement, no such claim or claims have been the subject of any legal proceeding asserted against the Seller.

f. Special Taxing Districts. Special Taxing Districts may be subject to general obligation indebtedness that is paid by the revenues produced from annual tax levies on the taxable property within such districts. Property owners in such districts may be placed at risk for increased mill levies and excessive tax burdens to support the servicing of such debt where circumstances arise resulting in the inability of such a district to discharge such indebtedness without such an increase in mill levies. Purchaser should investigate the debt financing requirements of the general obligation

indebtedness of such districts, existing mill levies of such district servicing the indebtedness and the potential for an increase in such mill levies. In the event that property is located within a special taxing district and Purchaser desires to terminate this Agreement as a result, if written notice is received by Seller on or before the **Off-Record Title Matters Objection Deadline,** then this Agreement shall terminate. If Seller does not receive Purchaser's notice by such date, Purchaser accepts the effect of the property's inclusion in such special taxing district(s) and waives the right to so terminate on this basis.

g. Right to Cure. If Seller receives notice of unmerchantability of title or of any other unsatisfactory title condition or title commitment terms as provided in this Section, Seller, in its sole discretion, may use reasonable efforts to correct said items and bear any nominal expense to correct the same on or prior to the **Title Objection Resolution Deadline**. If such unsatisfactory title conditions are not corrected on or before such date, then this Agreement shall then terminate, provided, however, Purchaser may, by written notice received by Seller on or before such date, waive objection to such items. Upon termination by Purchaser pursuant to this subsection, the earnest money shall be refunded to Purchaser.

h. Advisory Notice Concerning Title. The documents furnished in conjunction with the title commitment affect the title, ownership and use of the property and should be reviewed carefully. Other matters not reflected in such title documents may, however, affect the title, including but not limited to such matters as encroachments, zoning, unrecorded easements and claims of easements, leases and other regulations, concerning land use, development and environmental matters. Third parties may hold interests in such sub surface estates, which interests may give them rights to enter and use the property.

5. PROPERTY DISCLOSURE AND INSPECTION.

Prior to Seller's **Property Disclosure Deadline**, Seller shall provide to the Purchaser in writing a disclosure of matters, if any, which may be reasonably considered to be adverse regarding or affecting the property to the best of the Seller's current actual knowledge. Said disclosures shall be signed by the Seller. Said disclosures may assist Purchaser in inspecting the condition of the property but the same shall, in accordance with their terms, contain no representation or warranty concerning the condition of the property and the same shall not survive closing on this Agreement.

Purchaser shall have the right to inspect the physical condition of the property at Purchaser's expense. If the physical condition of the property is unsatisfactory in the Purchaser's discretion, Purchaser shall then, on or before the **Inspection Objection Deadline**: 1) notify Seller in writing of the termination of this Agreement or 2) provide Seller with a written description of unsatisfactory conditions which Purchaser requires

Seller to correct. If such written notice is not received by the Seller on or before the **Inspection Objection Deadline**, the physical condition of the property and inclusions shall be deemed to be satisfactory to Purchaser. In the event Seller receives a written notice requesting correction of unsatisfactory conditions and Seller and Purchaser have not agreed in writing to a settlement thereof on or before the **Resolution Deadline**, then this Agreement shall terminate one calendar day subsequent to the **Resolution Deadline** unless, prior to such time Seller has received a written withdrawal signed by the Purchaser of its notice of unsatisfactory conditions. Seller understands and acknowledges that the inspection referenced herein may include, but not be limited to inspection and investigation of the environmental condition of the subject property and Purchaser may engage in such inspections as to determine compliance with all environmental laws and regulations of the United States, and the State of Colorado.

Purchaser shall be responsible for the payment of all expenses and fees of inspections, surveys, engineering reports or any other work performed at Purchaser's expense and agrees to be responsible and pay for any damage which occurs to the property and/or the inclusions as a result of such activities. Purchaser agrees not to permit claims to accrue or liens of any nature to arise against the property from the process of inspecting, surveying and obtaining engineering or other consultant reports and/or for any other work performed during the course of such inspection on the property at Purchaser's request. Purchaser agrees to indemnify, protect and hold Seller harmless from and against any liability or expense of any nature incurred by Seller in connection with Purchaser's inspection or claims or liens arising there from. The indemnity granted in this paragraph includes the right of the Seller to recover such costs and expenses as may be incurred by Seller to enforce this paragraph including reasonable attorney's fees.

In the event that Purchaser timely terminates this Agreement in accordance with the provisions of this Section, then the earnest money shall be refunded to the Purchaser and the parties shall have no further rights or obligations to each other under the terms of this Agreement. Notwithstanding the foregoing, Purchaser shall have no right after the expiration of the inspection period to terminate this Agreement upon the basis of its inspection of the physical condition of the property. The property and inclusions, if any, shall be transferred to Purchaser at Closing and Purchaser agrees to accept the same **AS IS** and further acknowledges that Seller is making no representation or warranty of any nature which will survive Closing as to the condition of the property and the inclusions.

6. TRANSFER OF TITLE.

Subject to tender or payment at Closing as required herein and compliance by Purchaser with all other terms and conditions and provisions set forth herein, Seller shall execute and deliver a good and sufficient Special Warranty Deed to Purchaser at

Closing conveying the property free and clear of all taxes, except the general taxes for the year of closing. Except as may be provided herein, title shall be conveyed free and clear of all liens, including any governmental liens for special improvements installed as of the date of the Purchaser's signature hereon. Title shall be conveyed subject to:

a. Those specific exceptions described by reference to recorded documents as reflected in the title commitment accepted by Purchaser in accordance with the terms of this Agreement;

b. Distribution utility easements;

c. Rights of third parties not shown by the public records of which Purchaser has actual and/or constructive knowledge and/or which were accepted by Purchaser previously in accordance with the provisions of this Agreement;

d. Inclusion of the property within a special taxing district;

Any encumbrance required to be paid shall be paid at or before Closing from the proceeds of this transaction or from any other source.

7. CLOSING COSTS AND RELATED MATTERS.

Purchaser and Seller shall pay, in good funds, their respective closing costs and all other items required to be paid at Closing except as may be otherwise provided herein. Purchaser and Seller shall sign and complete all customary or reasonably required documents at or before Closing. In addition, each party agrees to execute whatever instruments of conveyance and/or other instruments or documents a party or its attorney may reasonably require in order to fully consummate the transaction contemplated by this Agreement. Fees for real estate closing services shall be paid at Closing, one-half by the Purchaser and one-half by the Seller. Any sales and use tax that may be accrued because of this transaction shall be paid when due by Purchaser.

8. APPORTIONMENT.

Property taxes and other special assessments, if any, for the current year, based on the previous year's taxes, shall be apportioned to the date of Closing. All utilities, rents, water and sewer charges, if any, and any other such related charges or expenses, if any, shall be paid to the date of Closing by the Seller.

9. POSSESSION OF PREMISES.

Possession of the premises shall be delivered to Purchaser at the **Possession Date**.

10. ASSIGNMENT AND BINDING AGREEMENT.

This Agreement shall not be assignable by Purchaser without the prior consent of the Seller expressed in writing, which consent shall not be unreasonably withheld. When this Agreement has been signed by both parties, it shall constitute a binding agreement and shall be effective and binding according to its terms upon the parties, their heirs, personal representatives, successors and permitted assigns.

11. COMMISSION.

Seller and Purchaser each represent that no agent or broker has been involved in this transaction and that no commission or fee of any nature or kind is due to any agent or other party as a result of this transaction.

12. RISK OF LOSS.

Subject to the provisions of Section 5 of this Agreement, the risk of loss to the property and improvements to be transferred pursuant to this agreement shall be borne by Seller prior to Closing. After closing, the risk of loss to the property and the improvements shall be borne by Purchaser.

13. RECCOMENDATION OF LEGAL AND TAX COUNSEL.

By executing this document each of the parties expressly acknowledges, agrees and represents to the other that it has been advised that this document has important legal consequences and may have tax consequences as well and each has received, or had the opportunity to receive, the benefit of consultation with legal and tax or other counsel prior to the execution of this Agreement.

14. DEFAULT.

In the event of a default by Purchaser in any of the terms, conditions, promises and/or covenants of this Agreement, Seller may elect to treat this Agreement as cancelled, in which case all payments and things of value previously transferred to, or on behalf of, Seller hereunder, including the earnest money, shall be forfeited and paid to and retained on behalf of Seller. Alternatively, Seller may elect to treat this Agreement as being in full force and effect and Sellers shall have the right to specific performance or damages or both.

In the event of a default by Seller in any of the terms, conditions, promises and/or covenants of this Agreement, Purchaser may elect to treat this Agreement as cancelled

in which case all payments and things of value previously transferred by Purchaser hereunder, including the earnest money, shall be returned to and retained on behalf of Purchaser. Alternatively, Purchaser may elect to treat this Agreement as being in full force and effect and Purchaser shall have the right to specific performance or damages or both.

In the event of a dispute of any kind or nature arising under this Agreement or matters related to this Agreement, the parties shall negotiate in good faith in an effort to resolve the dispute prior to the commencement of litigation or arbitration. In the event of any arbitration or litigation relating to this Agreement, the arbitrator or the court shall award to the prevailing party all reasonable costs and expenses, including reasonable attorney's fees. Nothing herein shall be construed or interpreted to commit either party to a binding arbitration process.

15. OFFER ONLY.

Until signed by Purchaser this Agreement shall constitute an offer to sell only. If Purchaser shall fail to accept this Agreement in writing and deliver it, fully executed, to Seller by the close of business on the **Acceptance Deadline,** this offer shall be void and of no further force and effect. If accepted this document shall constitute a contract between Seller and Purchaser. A copy of this document may be executed by each party separately and when each party has executed a copy thereof, such copies, taken together shall be deemed to be a full and complete contract between the parties.

16. CLOSING.

Delivery of the deed from Seller to Purchaser shall be at closing. Closing shall be on the date specified as the **Closing Date** or, by mutual agreement of the parties, at an earlier date. The place of Closing shall be at the Walsenburg, Colorado offices of Dotter Abstract Company.

17. COMPLETE AGREEMENT/MODIFICATION AND SURVIVAL.

This Agreement constitutes the entire agreement between the parties relating to the subject matter hereof and any prior agreements pertaining thereto, oral or written, have been merged and integrated into this Agreement. No modification of any of the terms of this Agreement shall be valid or binding upon the parties or enforceable in any manner unless the same is set forth in a writing and executed by the parties hereto. Any obligation in this Agreement which, by its express terms is intended to be performed and/or adhered to after termination or Closing, shall survive such termination or Closing.

18. FACSIMILIE AND ELECTRONIC SIGNATURES.

Signatures may be received by facsimile or by other electronic transmission. Documents with original signatures shall be provided to the other party at closing or upon the earlier request of either party.

19. NOTICES.

All notices required or permitted hereunder shall be in writing and delivered either in person to the other party or to the other party's authorized agent, or by Certified Mail, Return Receipt Requested, postage fully prepaid to the addresses set forth hereinafter, or to such other address as either party may designate in writing and deliver as herein provided

SELLER: **Archuleta Living Trust**
Louis L. and Constance I. Archuleta, Trustees
12 Glendora Ct.
Pueblo, CO 81005

PURCHASER: **Huerfano County Colorado**
Board of County Commissioners
401 Main St.
Walsenburg, CO 81089

IN WITNESS WHEREOF, Seller has executed this Agreement on the 6th day of August, 2021.

SELLER:
ARCHULETA LIVING TRUST

By:

Louis L. Archuleta

Louis L. Archuleta, Trustee

Constance I. Archuleta

Constance I. Archuleta, Trustee

IN WITNESS WHEREOF, Purchaser has executed this Agreement on the ____ day of _____, 2021

PURCHASER:

HUERFANO COUNTY COLORADO
A body corporate and a political subdivision of the State of Colorado

By:

_____
Name:
Title: Chair, Board of County Commissioners

ATTEST:

BY: _____
Name:
Title: County Clerk

- EXHIBIT A to CONTRACT
ARCHULETA TRUST / HUERFANO CTY -

LAND SURVEY PLAT

FOR CONSTANCE ARCHULETA

LOT 4, (SW 1/4 SW 1/4) SECTION 18, TOWNSHIP 26 SOUTH, RANGE 69* WEST, 6th P.M.
COUNTY OF HUERFANO, STATE OF COLORADO

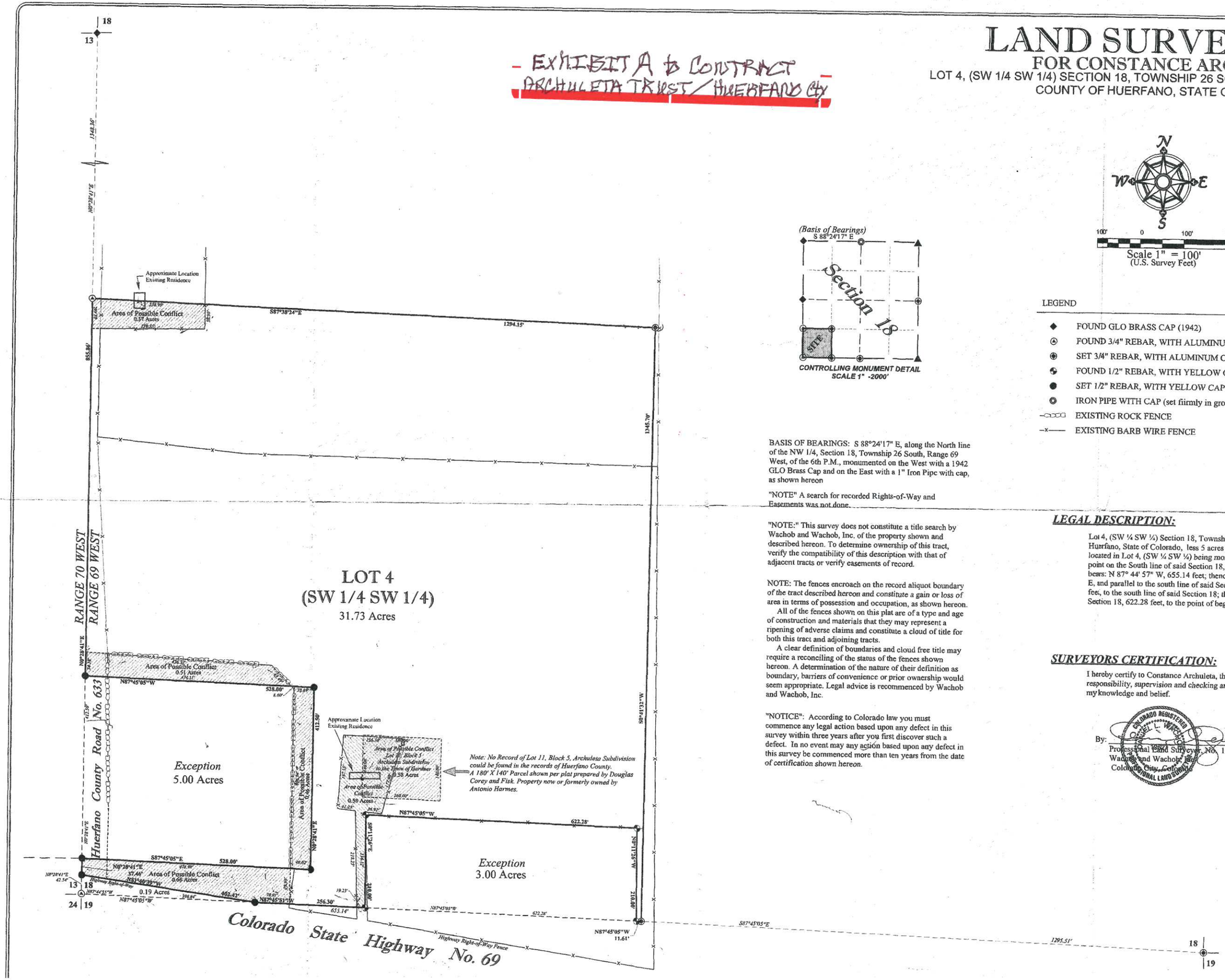

CONTROLLING MONUMENT DETAIL
SCALE 1" -2000'

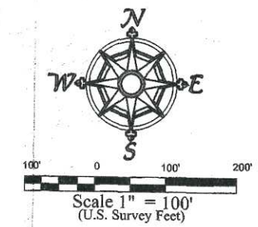

LEGEND

- FOUND GLO BRASS CAP (1942)
- FOUND 3/4" REBAR, WITH ALUMINUM CAP, PLS 16163
- SET 3/4" REBAR, WITH ALUMINUM CAP
- FOUND 1/2" REBAR, WITH YELLOW CAP
- SET 1/2" REBAR, WITH YELLOW CAP
- IRON PIPE WITH CAP (set fiirmly in ground)
- EXISTING ROCK FENCE
- EXISTING BARB WIRE FENCE

BASIS OF BEARINGS: S 88°24'17" E, along the North line of the NW 1/4, Section 18, Township 26 South, Range 69 West, of the 6th P.M., monumented on the West with a 1942 GLO Brass Cap and on the East with a 1" Iron Pipe with cap, as shown hereon

"NOTE" A search for recorded Rights-of-Way and Easements was not done.

"NOTE:" This survey does not constitute a title search by Wachob and Wachob, Inc. of the property shown and described hereon. To determine ownership of this tract, verify the compatibility of this description with that of adjacent tracts or verify easements of record.

NOTE: The fences encroach on the record aliquot boundary of the tract described hereon and constitute a gain or loss of area in terms of possession and occupation, as shown hereon.

All of the fences shown on this plat are of a type and age of construction and materials that they may represent a ripening of adverse claims and constitute a cloud of title for both this tract and adjoining tracts.

A clear definition of boundaries and cloud free title may require a reconciling of the status of the fences shown hereon. A determination of the nature of their definition as boundary, barriers of convenience or prior ownership would seem appropriate. Legal advice is recommenced by Wachob and Wachob, Inc.

"NOTICE": According to Colorado law you must commence any legal action based upon any defect in this survey within three years after you first discover such a defect. In no event may any action based upon any defect in this survey be commenced more than ten years from the date of certification shown hereon.

LEGAL DESCRIPTION:

Lot 4, (SW ¼ SW ¼) Section 18, Township 26 South, Range 69 West, 6TH P.M., County of Huerfano, State of Colorado, less 5 acres for Gardner Fair Association, less a tract of land located in Lot 4, (SW ¼ SW ¼) being more particularly described as follows: Beginning a point on the South line of said Section 18, from which the southwest corner of said Section bears: N 87° 44' 57" W, 655.14 feet; thence N 01° 32' 10" W, 210 feet; thence S 87° 45' 05" E, and parallel to the south line of said Section 18, 622.28 feet; thence S 00° 41' 32" W, 210 feet, to the south line of said Section 18; thence N 87° 45' 05" W, along said south line of Section 18, 622.28 feet, to the point of beginning, 3 acres.

SURVEYORS CERTIFICATION:

I hereby certify to Constance Archuleta, that this plat was prepared by me or under my direct responsibility, supervision and checking and the parcel is monumented as shown to the best of my knowledge and belief.

By: _____ Date: 5-25-2015

Professional Land Surveyor, No. 19627
Wachob and Wachob, Inc.
Colorado City, Colorado

COLORADO REGISTERED PROFESSIONAL LAND SURVEYOR

Wachob and Wachob, Inc.
Professional Land Surveyors, Colorado City, Colorado
P.O. Box 19376, Zip 81019 Phone (719)-676-3665

Job Name: 2015-044.TRV

DX Fleet Subscription Agreement

Distributor / Sales Agent Contact Info:

Company Name:	Eaton Sales & Service	Sales Rep Name:	Evan Plattner
Street:	610 E. Brookside St	Email:	evanp@eatonmetal.com
City:	Colorado Springs	Phone:	(719)475-9440
State:	CO		
Zip:	80905		
Country:	United States of America		

Subscriber Billing Address & Billing Contact Info:

*****Note: This section is to gather end user / Subscriber billing information only. The site details of where DX Fleet will be installed/deployed is captured in Exhibit A of this Subscription Agreement.*****

Legal Entity Name:	Huerfano County, Colorado	Billing Contact Name:	Melanie Bounds
Company Name:		Email:	mbounds@huerfano.us
Street:	Colorado	Phone:	(719)738-30001
City:	Walsenburg	EIN/Tax ID No.:	
State:	Colorado	Dun & Bradstreet No.:	
Zip:	81089		
Country:	United State of America		

This "Subscription Agreement" is a legal document between OPW Fuel Management Systems Inc. part of the Dover Fueling Solutions family of companies and the Subscriber, as defined above. OPW Fuel Management Systems Inc. means "DFS", "we" or "our" and Subscriber means "you", "your" or "I". Subscription terms, if any follow the ordering grids below.

Installation Services (One-Time)			
Service	MSRP	Qty.	Part Number
Initial Site Setup Fee	$500	1	65-0004
Additional Site Setup Fee	$250/site	0	65-0005
Data Migration Service	$985	1	65-0007

Subscription Service						
Subscription	Annual MSRP per Unit	Annual Renewal Charges	Period	Minimum Term	Qty.	Part Number
DX Fleet Subscription (External FSC Config)	$900/site	$900/site	1 (Annual)	1 Year	1	65-0006

DX Fleet Subscription (Internal FSC/PV200 Config)	$900/site	$900/site	1 (Annual)	1 Year	0	65-0011
DX Fleet Subscription Only (No Hardware)	$900/site	$900/site	1 (Annual)	1 Year	0	65-0012
DX Fleet Renewal Subscription	$900/site	n/a	1 (Annual)	1 Year	0	65-0008

☐ Subscription Trial

Total Annual Charges for Subscription(s)	$ 900.00
Total One-Time Fees	$ 1,485.00
Grand Total (Before Taxes)	$ 2,385.00
Effective Date (Today's Date)	08/06/2021
Projected Subscription Start Date (same as site installation/activation date)	
Projected End of Minimum Term	

Defined Terms

As used in this Subscription Agreement, capitalized terms herein shall have the following meanings set forth in the tables above or as defined individually herein.

"Excluded Charges" means charges that are not included as a part of your standard Subscription Service plan, which include but are not limited to any, hardware purchases, professional services, non-recurring expense, non-standard customizations, network configurations or modifications.

"Intermediary Provider" means the DFS authorized third party Distributor / Sales Agent as listed above.

"Set-Up Fees" means fees associated to the software installation and on-boarding process to enable the Subscription Service.

"Periodic Charges" means the total amount owed for the Subscription Service in a calendar year divided by the number of Period(s) set forth in the Subscription Service table above.

Minimum Term and Renewal

Subscription Services. All Subscription Services will be governed by the terms of this Subscription Agreement beginning on the Effective Date. The prices, features and options of the Subscription Services depend on the plan selected as well as any changes instigated by you. We reserve the right to change our subscription plans or adjust pricing for our Subscription Services or any components thereof in any manner and at any time in our sole discretion. Except as otherwise expressly provided for in this Subscription Agreement, any price changes or changes to your Subscription Services will take effect following 30 days written notice to you. Your Periodic Charges will begin on the Subscription Start Date. You are also responsible for all Excluded Charges. Your subscription will automatically renew at the end of the Minimum Term. Each Automatic Renewal Term will be 12 months in length ("Automatic Renewal Term"). Should you desire to increase the number of Units to your Subscription Service, you will request those additional Units by providing in writing an amended Exhibit A. The Periodic Charges for such additional Units will be pro-rated for the remainder of the current Subscription Period after the install date of such additional Units.

Payment Terms

Recurring Charges. You agree to pay all Periodic Charges in full within 30 days of the date of invoice. You are responsible for but not limited to any applicable sales, use and value added tax (VAT), unless you are tax exempt. If

you are a non-government Subscriber and fail to pay your invoice charges, you are responsible for collection costs including attorneys' fees. When you purchase a Subscription Service, you must provide accurate and complete information for a valid payment method that you are authorized to use. You will be billed for your Subscription Service either through the payment method you provide, such as a credit card, or through an Intermediary Provider. You must promptly notify DFS of any change in its invoicing address and must update its account with any changes related to its payment method. BY PURCHASING A SUBSCRIPTION SERVICE, YOU AUTHORIZE DFS OR ITS AGENT TO CHARGE ITS PAYMENT METHOD ON A RECURRING (E.G. MONTHLY, QUARTELY OR YEARLY) BASIS ("AUTHORIZATION") FOR: (a) THE APPLICABLE SUBSCRIPTION SERVICE CHARGES; (b) ANY AND ALL APPLICABLE TAXES; AND (c) ANY OTHER CHARGES INCURRED IN CONNECTION WITH YOUR USE OF THE SUBSCRIPTION SERVICES. The Authorization continues through the applicable Minimum Term and any Automatic Renewal Term until you cancel, as set forth in the Cancellation Section.

No Refunds. You will timely pay DFS all fees associated with your Subscription Service or account. YOUR PAYMENTS ARE NON-REFUNDABLE EXCEPT AS EXPRESSLY PROVIDED IN THESE TERMS. Charges for pre-paid Subscription Services will be billed to you in advance. Charges for standard Subscription Services will be billed in arrears in accordance with the number of Periods noted in the Subscription Service table above.

Late Fees and Collection Cost. If DFS does not receive payment from your payment method, you agree to pay all amounts due upon demand. For each calendar month, or fraction thereof, that payment is late; you shall pay a late payment charge computed at the rate of 1.5% per month on the overdue balance, or the maximum rate permitted by law, whichever is less. You will reimburse any costs or expenses (including, but not limited to, reasonable attorneys' fees) incurred by DFS to collect any amount that is not paid when due. Payments marked 'paid in full', or with any other restrictive language will not operate as an accord and satisfaction without our prior written approval.

Invoices. DFS will provide billing information in a format we choose, which may change from time to time in our sole discretion. DFS reserves the right to correct any errors or mistakes that it identifies even if it has already issued an invoice or received payment. You agree to notify us about any billing problems or discrepancies in writing within thirty (30) days after they first appear on your invoice. Written notice shall be sent by email to Dbs_na_ar_inquiries@dovercorp.com If you do not bring such problems or discrepancies to our attention within thirty (30) days, you agree to waive your rights to dispute such problems or discrepancies. Any Excluded Charges will be detailed and issued to you in a separate statement of work between DFS and you.

Intermediary Provider Billing. If your Subscription Service is based on intermediary provider billing, your intermediary provider will automatically charge your account monthly for the cost of the Subscription Service and any applicable taxes. If you are not current with your Subscription Service payments, we reserve the right to suspend access to your Subscription Service or terminate your Subscription Service. You will be responsible for paying all past due amounts.

Cancellation. You can cancel your Subscription Service at any time with 90 days prior written notice to DFS. We do not provide refunds for partially rendered Subscription Services. If you choose to cancel your Subscription Service before the end of the Minimum Term, you will be charged an Early Cancellation Fee to your current payment method on file. The Early Cancellation Fee will be equal to one (1) year of Periodic Charges. We reserve the right to cancel your Subscription Service for failure to fulfill your obligations under this agreement, including timely payment. Send your email notice of cancellation to SaaS Operations at global.saasopssupport@doverfs.com.

Miscellaneous

Applicable Law. This Subscription Agreement will be interpreted and construed in accordance with the laws of (a) the State of Texas if Buyer's invoiced place of business is in the U.S., Canada or Mexico; or (b) England and Wales if the Buyer's invoiced place of business is outside the U.S., Canada or Mexico in either case without giving effect to any choice of law rules that would cause the application of laws of any other jurisdiction.

Content. If you elect to provide your own media content, you shall be solely responsible for your own media content and the consequences of submitting and publishing your media content through the Subscription Service. You affirm,

represent, and warrant that you own or have the necessary licenses, rights, consents, and permissions to publish media content you submit.

You further agree that any media content you submit to the Subscription Service will not contain third party copyrighted material, or material that is subject to other third party proprietary rights, unless you have permission from the rightful owner of the material or you are otherwise legally entitled to post the material.

Dover Fueling Solutions Terms and Conditions. At any time, the most current version of our Terms and Conditions of Sale, End User License Addendum and Services Addendum ("Terms"), can be found at www.doverfuelingsolutions.com/terms, as may be modified by DFS from time to time in its sole discretion. DFS Terms apply to all Subscription Services ordered. This Subscription Agreement will be interpreted by the then-current version in accordance with the Effective Date of this Subscription Agreement. In the event that there is a conflict of terms between the Terms and Conditions of sale and this Subscription Agreement, the terms of this Subscription Agreement control. This Subscription Agreement is subject to our approval. Except as otherwise provided in this Subscription Agreement, any hardware provided by DFS pursuant to this Subscription Agreement is provided subject to a parts-only warranty and otherwise under the conditions set forth under the Terms. Onsite labor support is not included in the Subscription Services. DFS will retain ownership of any hardware device(s) included as a part of the Subscription Service(s) and will upgrade such hardware device(s) only as it deems necessary to enable the technological functionality of the Subscription Service(s).

Product Specifications. Certain Subscription Services have specific terms and minimum technical requirements which are incorporated by reference and made a part of this Subscription Agreement if they apply to your order. In order for Subscription Services to be rendered you must meet our minimum product specifications which can be found at www.doverfuelingsolutions.com/terms. We reserve the right to update or modify the minimum specifications at any time without notice. If the product is not part of your order, the product specific terms do not apply. If there is any conflict between minimum product specifications terms and the Subscription Agreement, the minimum product specifications terms control. Failure to maintain these specifications will not result in suspension of Periodic Charges. We are not responsible for any of your malfunctioning equipment not covered under warranty.

Prior Subscription Agreement. This Subscription Agreement shall supersede and replace all prior Subscription Agreements, orders and understandings, oral or written, between DFS and Subscriber in its entirety.

Acknowledgement:

_____
Signature of Authorized Representative for Subscription

_____
Printed Name

_____
Title

Please complete Exhibit A on next page for each site location

DOVER FUELING SOLUTIONS	Exhibit A – Site Location For any questions about your subscription agreement, contact a representative at global.saasopssupport@doverfs.com. For any questions about payment and billing contact a representative at Dbs_na_ar_inquiries@dovercorp.com. Thank you.

Site Location Information (site name and location that DX Fleet will be deployed at)

Site Name:	Huefano County Road & Bridge
Street Address:	1010 S. Main St
City:	Walsenburg
State:	CO
Zip:	81089
Country:	U.S.A.
MNSP (Managed Network Service Provider.):	

Subscription Service User Information (can have multiple users per site)

Enter all of the names of the people who need user accounts to login / access the subscription service online (i.e. DX Fleet). All users will have the same permissions within DX Fleet with the exception of the designated Org Admin(s).

- Org Admin: This role is assigned to a person (or select few people) in an organization as the designated delegate. The Org Admin is allowed to modify organization-wide settings and preferences as well as add/remove users for DX Fleet access within their organization as it is configured within the DFS DX solutions suite / cloud platform.

First Name	Last Name	Corresponding Company Email Address	Phone Number	Org Admin

Exhibit A

Statement of Work – Customer

This Statement of Work sets forth Buyers acknowledgement that the Products noted below are being installed as test Products that have not been officially released by Seller (the "SOW"). Seller personnel and/or Seller's representatives (Authorized Service Organization) will be allowed access to Products to test, update, or make changes to the Products as needed for the duration of the testing period.

1. Purpose

The purpose of this SOW is to ensure that all requirements, expectations, and implementations are understood, aligned, and acknowledged by all parties prior to entering any commercially binding agreement. This SOW provides a product/solution overview, feature expectations, customer and site requirements for deployment, and links and/or accompanying documents pertaining to DFS Standard Terms & Conditions and Service Level Agreements including a Master Services Agreement (MSA), if applicable.

2. Product Specifications & Definitions

DX Fleet Fuel management software provides, efficiency of a cloud software for the fleet management with real time fuel transactions, central card management and intelligent reporting tools for automated and manual reports

DX Fleet Fuel management provides:

- Efficiency of cloud-based technology with web-based cloud application built on Microsoft Azure, state of art security features, data integrity and confidentiality
- Real time data driving real time decisions, real time fuel transactions with constantly up to date information, fuel inventory & system diagnostics
- Card management with customized restrictions for drivers, vehicles or Sites.

DX Fleet uses a combination of both cold storage as well as hot storage for data retrieval, visualization, as well as reporting. Hot storage is limited to the last 90 days of data and is used for web visualization and easy retrieval. However, cold storage is limited to 3 years of data. Additionally, data can be exported using standard reports and stored by the customer as necessary.

2.1. *Use Cases & Product Scope Expectations*

Use Cases	Scope Expectations

Dashboards & Real Time Views	*Dashboard module provides a view with critical information at Network & Site level. Allows users to easily see and review fueling transactions by date range, account, site & type.*
PCF Fuel Management	*Allows to set up parameters related to sites, users, cards and accounts that are managed through the Fleet cloud application.*
Alerts	*Alerts provide email/SMS notifications for critical site issues*
ATG Inventories	*ATG Inventory and Delivery – these pages provide the data from an ATG installed at a site for inventory & deliveries.*
Reports[1]	*Allows user to run and generate below on demand static report:* *Activity Detail by Driver (Card1)* *Activity Detail by Vehicle (Card2)* *Activity Detail by Account for Driver (Card1)* *Activity Detail by Account for Vehicle (Card2)* *Product Totals by Site* *Pump Totals by Site* *Network Transactions by Card Type* *Network Transactions by Site* *Odometer Exceptions* *Incomplete Transactions*

[1]Sample reports can viewed in Appendix

2.2. *Preview or Preproduction Features*

A pre-preproduction service or feature of a Cloud Service is considered "**Preview**" when DFS makes such services or features available at no charge, with limited or pre-release functionality, or for a limited time to try available functionality (such as beta or preview designated Cloud Services). **Preview** services are excluded from available service level agreements. A **Preview** may not be covered by support and DFS may change or discontinue this service or feature at any time and without notice. DFS is not obligated to release a **Preview** or make an equivalent service generally available.

2.3. *Out of Scope Cloud & Product Features*

Cloud services, product features, and/or reporting capabilities not explicitly defined in Product Use Case and/or Product Feature Map section of this SOW are considered "Out of Scope" and will not be considered a determining factor of Customer product acceptance, SLA definition (see Exhibit B), or DFS success criteria.

2.4. *Customer Acceptance*

Customer accepts cloud services and product by ordering, enrolling, using, or making a payment for the Cloud Service. When DFS accepts Customers order and Contract, DFS provides Customer the authorizations specified in the Master Service Agreement.

Additional customer acceptance activities and validation may be applicable during new feature development and rollout. However, it is not mandated as a part of new feature development.

3. 3. Site Implementation Process and Definitions

3.1. *Definitions*

3.1.1. DFS Cloud Services Requirements – Minimum network, hardware, software and site requirements outline in DFS terms

3.1.2. DFS Cloud Services – DFS Service offering that requires a DFS gateway with an internet connection that allows communication to the DFS cloud environment. DFS Cloud Services include DX Fleet by DFS.

3.1.3. EMV Readiness – Certified EMV hardware/software installed and operational. Not Applicable to DX Fleet-only

3.1.4. Network Firewall Policy – Local network policies which define the devices, IP scheme, zones, ports, egress rules, destination, protocol and ports.

3.1.5. Certified ASO/Field Technician – Authorized Service Organization (ASO) and/or field technician that is certified in OPW-FMS FSC3000.

3.1.6. LMS Online Training – A technology enabled service website which includes product information and product training material.

3.2. *Pre-Deployment Expectations*

3.2.1. ASO/Distributor/Customer has initiated the Site Startup/Site Onboarding process at least 48 hours prior to installation, setup/onboarding and device provisioning

3.2.2. Entire production & lab customer site list provided to DFS and all sites registered within DFS Oracle system

3.2.3. Site Survey's completed for all customer sites and customer sites that do not meet DFS Minimum Product specifications identified

3.2.4. Product hardware order placed & confirmed

3.2.5. All customer sites meet the DFS Minimum Product network, hardware and software specifications and in working order at the point of installation/onboarding and device provisioning

3.2.6. All fueling-related equipment, software and network connectivity at each Customer Site shall be 100% serviceable and operational at the time of each installation, set-up/onboarding

3.2.7. All customer sites' local network is properly configured to allow communication to the DFS Cloud environment prior to hardware installation, setup/onboarding and device provisioning

3.2.8. Customer organization administrator identified & Product LMS training completed

3.2.9. Customer organization administrator confirmed access to DX Fleet User Interface

3.2.10. Installation/onboarding and device provisioning is installed by a certified OPW-FMS ASO/field technician.

3.3. *Abort Scenarios*

3.3.1. ASO/Distributor/Customer has not initiated the Dispenser/Site Startup process 48 hours prior to installation, onboarding and/or device provisioning for new site installs.

3.3.2. Customer site does not meet the minimum safety specifications, network specifications, hardware specifications and software specifications outlined in Terms and Conditions DFS Minimum Product Specifications document.

3.3.3. Customer sites local network is not properly configured and functional to allow communication to the DFS Cloud environment at the point of installation, set-up/onboarding and device provisioning

3.3.4. OPW-FMS Certified Technician with active certifications not onsite to perform hardware & software installation, onboarding and/or device provisioning.

3.4. *Site Requirements*

The following list represent the technical bill of materials required at the site to ensure proper delivery of features and benefits specified in section 2.

3.4.1. DFS Edge Gateway

3.4.2. FSC 3000

3.4.2.1. *Must be running "Multi trucking V1.20i"*

3.4.3. TCP/IP Connectivity to the DSF Edge (DFS Wireless Connect, and/or CAT5)

3.4.4. Broadband connectivity with minimum of 10 mbps to the cloud (as defined by the FCC)

3.4.5. Serial Connectivity between FSC 3000 and DFS Edge box – To be supplied by DFS

3.5. *Site Implementation Scope*

3.5.1. Implementation Scope

3.5.1.1. *Review of Customer Site Survey Report/Findings*

3.5.1.2. *Review the video training and technical documentation*

3.5.1.2.1. Online web LMS product information and training prior to a post beta implementation.

3.5.1.3. *DFS Cloud Services system set-up/onboarding and device provisioning for DX Fleet & Edge*

3.5.1.4. *DFS set up of Customer Organization Administrator, Customer Organization and Customer sites set up within DX Fleet User Interface*

3.5.1.5. *DFS configuration of Edge hardware devices prior to shipping to customer labs*

3.5.1.6. *DFS confirmation of Edge hardware device communication to DFS Cloud Services*

3.5.2. Out of Scope (OOS) Costs

3.5.2.1. *Labor Costs: For time of service that is not within the scope of this document or covered by a repair task must comply with the following to be approved for payment.*

3.5.2.2. *Must be clearly documented with root cause to determine if the fiscal responsibility is owned by the end customer, ASO, or DFS.*

3.5.2.3. *Must be communicated on the day of occurrence to DFS.*

3.5.2.4. *The overall allocated time for in scope activities must be exhausted before OOS can be added. Actual in scope time plus OOS time must exceed the allocated in scope time.*

3.5.2.5. *The overall allocated time for in scope activities must be exhausted before OOS can be added. Actual in scope time plus OOS time must exceed the allocated in scope time.*

3.5.2.6. *ASO/Field tech dispatches for Edge offline/network connectivity issues and fueling points offline.*

3.5.3. Exclusions:

The following items are excluded from the scope of work:

3.5.3.1. *All fueling-related equipment, software and network connectivity at each Customer Site shall be 100% serviceable and operational at the time of each installation, set-up/onboarding, and no repairs shall be required prior to or in connection with performance of the DFS Cloud Services. If repairs should be required and are within the capabilities of ASO personnel repair of existing*

maintenance issues will be addressed through a separate task number issued by the SaaS Ops Service Team if under a service warranty.

3.5.3.2. *Overtime, additional trip charges, charges for multiple technicians per site.*

3.5.3.3. *Other tasks requested by the customer that are not specifically herein as "In-Scope".*

3.5.3.4. *Dedicated DFS engineering, DFS development, DFS field service resources for cloud services or new product feature requests.*

4. Implementation Project Timeline

This project is expected to have the site implementation completed within the agreed upon timeline as available by the DSF SaaS Operations and Implementation team. This timeline is dependent on ASO availability and scheduling. All scheduling is subject to change based on queue priority and timing of SOW acceptance. This section to remain blank until rollout schedule is agreed upon by all parties represented.

Start Date	Projected End Date	Blackout Dates	Time/Day of Week	Daily Velocity	Total Sites

5. ASO/Field Technician Requirements

5.1. *Tech Certification Requirements*

5.1.1. OPW-FMS FSC3000

5.1.2. DX Fleet TBD

5.2. *On-Site Safety*

Safety is critical to the success of this project. Performing the work in a safe manner is the most important aspect of the job. Some safety items to include during your time on the site:

5.2.1. Use barricades, cones, tape and vans to isolate work area and to notify customers which dispensers are inoperative during the work

5.2.2. Wear high visibility safety vests

5.2.3. Use grounded wrist strap

5.2.4. Use only GFCI protected circuits, if needed

5.2.5. Wear Safety glasses

5.2.6. Wear hard hats (if applicable)

6. Technical Support

Technical support and associated service SLAs and processes are defined in the DFS Solutions SLA documentation and are applicable dependent on the implementation currently being rendered. Please refer to Exhibit B – Service Level Agreement for any additional clarification based on site or lab setup and applicability.

All other terms are subject to all of the Terms and Conditions attached hereto and the Terms and Conditions are hereby incorporated by reference into this Statement of Work and made a part of this Exhibit A - Statement of Work.

Exhibit B – Service Level Agreement

This Exhibit B – Service Level Agreement ("Exhibit B") is hereby attached to and incorporated by reference to the DX Fleet SOW between DFS and Customer. Unless defined in this Exhibit B, capitalized terms have the meanings set forth in the SOW or the Agreement.

Customer Support

Support hours and response times are based upon the issue(s) priority level and which environment it occurred in. DFS DX Solutions are monitored and managed continually as further provided herein.

SERVICE	DEFINITION	DETAILS
Support Tier Hours	Help desk standard hours of operation are stated in US Eastern time.	Monday through Friday 9AM – 6PM EST for P2 through P4 priority level issues & 24 x 7 for P1 priority level issues in production environments only (Via email & phone)
Response Time SLA	Defined period for acknowledgement and assignment of tickets based on priority and environment.	✓ (See "Response Time SLA" below)
Uptime SLA	Defined percentage of time during a given month the DFS cloud services environment is available to you.	✓ (See "Uptime SLA" below)
Issue Routing Model	Ticket assignment protocol.	✓ (QUEUED)

Staging Environment access and support from Client Lab	Support provided for a Customer lab environment which connects to the DFS DX Cloud staging environment.	✓

Response Time SLA

Response times refers to how quickly DFS support will respond to technical issues submitted by email or phone. Response times are based on the Support Tier Hours, and the assigned priority level and environment in accordance with in the table below.

PRIORITY LEVEL	PRIORITY DEFINITION	DESCRIPTION	Environment	
			STAGING	PRODUCTION
P1	Outage / Severe Business Impact	• Production system down or inaccessible • Data loss or data corruption • Repeated service interruptions • Severe performance degradation impacting business	1 BUSINESS DAY	1 HOUR
P2	High / Significant Loss of Functionality	• Critical, previously available functionality missing without workarounds, but system is up • Intermittent service interruptions • Key functionality retained but with measurable performance degradation	1 BUSINESS DAY	1 BUSINESS DAY
P3	Medium / Minor Impact	• Some functionality not working as expected, but workarounds are available • How-to or usage questions	3 BUSINESS DAYS	3 BUSINESS DAYS
P4	Low / No Operational Impact	• Enhancement requests • General questions	⊘	5 BUSINESS DAYS

Response Channels	Primary: DFSDX Help Center Form (https://dfsdx.zendesk.com/hc/en-us)	✓	✓
	Secondary: Email (*dfsdxsupport@Doverfs.com*)	✓	✓
	Troubleshooting: Phone (https://dfsdx.zendesk.com/hc/en-us/articles/900002180226-Contact-Us)	✓	✓

Customer will maintain their current level of support in accordance with this Exhibit B until contract renewal, at which time Customer shall have the option to select a new plan. For more information, please contact DFS SaaS Support (dfsdxsupport@doverfs.com.

DFS Uptime SLA

DFS shall use reasonable commercial efforts, to ensure that the DFS DX Solutions are available to Customer. If the DFS DX Solutions does not meet the Solution Uptime Level, you may be eligible to receive the Service Credits described below (the "DFS Uptime SLA").

Definitions: The following definitions shall apply to the DFS Uptime SLA.

- DFS DX Solution(s) means, the cloud-based Software as a Service technology offerings from DFS. These services include, but are not limited to, iSense (DX Monitor), DX Promote, DX Wetstock, DX Fleet and DX Retail.
- "Downtime" means, the DFS DX Solution is not available for user log in. Downtime is measured based on server-side solution access and user authentication.
- "Emergency Downtime" means those times where DFS becomes aware of a vulnerability which, based on a risk assessment of the vulnerability, DFS deems to require immediate remediation and, as a result, the DFS Cloud Service is made temporarily unavailable in order for DFS to address the vulnerability. Emergency Downtime is not considered Downtime for purposes of this DFS Uptime SLA, and will not be counted towards any Downtime periods
- "Monthly Uptime Percentage" means the total number of minutes in the calendar month minus the number of minutes of Downtime suffered from all Downtime periods in the calendar month, divided by the total number of minutes in the calendar month. Failure to meet designated Solution Uptime Level for three consecutive months will result in customers right to terminate the affected service(s).
- "Scheduled Downtime" means those times where DFS notifies you of periods of Downtime prior to the commencement of such Downtime. Scheduled Downtime is not considered Downtime for purposes of this DFS Uptime SLA, and will not be counted towards any Downtime periods.
- "Services" means the services provided to you by DFS.
- "Service Credit" may be provided according to the credit allowances in the SLA table.

Customer Must Request Service Credit: In order to receive any of the Service Credits described above, you must notify Dover Fueling Solutions in writing within (30) days of the time you become eligible to receive a Service Credit.

Maximum Service Credit: The aggregate maximum number of Service Credits you can claim for any and all Downtime Periods that occur in a single calendar month shall not exceed thirty days of

Services added to the end of your billing cycle. Service Credits may not be exchanged for, or converted to, monetary compensation.

The DFS Uptime SLA does not apply to any connectivity, access and performance issues:

(i) caused by factors outside of Dover Fueling Solutions reasonable control;
(ii) that resulted from any actions or inactions of you or any third parties; or
(iii) that resulted from your network and/or equipment and/or third-party equipment (not within the primary control of DFS).

This Exhibit B states your sole and exclusive remedy for any failure by DFS to provide the Services as a result of Downtime. DFS reserves the right to change, update or end SLA Levels.

Uptime SLA Exclusions: SLA Factor	DEFINITION	DETAILS
Solution Uptime Level	Uptime percentage by level	99.0%
Service Credit	1% Credit of the SaaS Solution Monthly Service Fee of affected solution for every 0.1% below defined Solution Uptime Level *	

**Service Credit Max for any month of service is 25% of SaaS Solution Monthly Service Fees of affected Solution(s)*

Report Samples

Activity Detail by Driver (Card1)

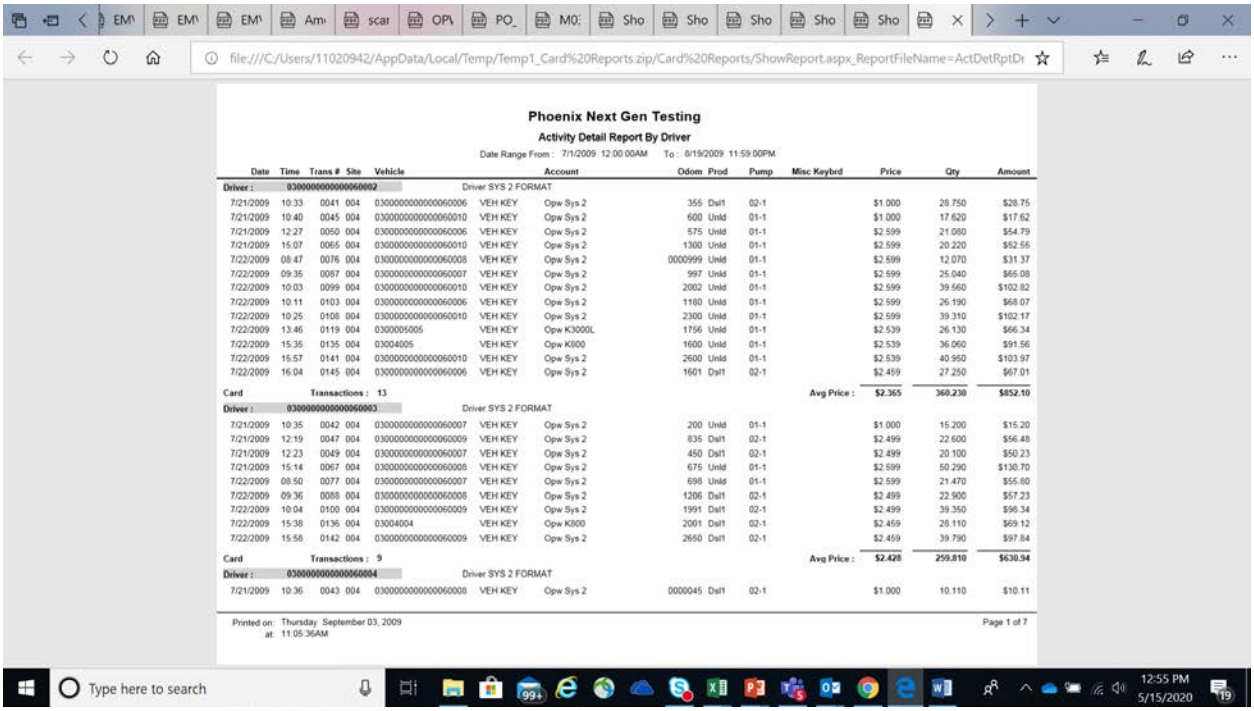

Phoenix Next Gen Testing

Activity Detail Report By Driver

Date Range From : 7/1/2009 12:00:00AM To : 8/19/2009 11:59:00PM

Date	Time	Trans #	Site	Vehicle	Account	Odom	Prod	Pump	Misc Keybrd	Price	Qty	Amount
Driver :				**030000000000060002**	Driver SYS 2 FORMAT							
7/21/2009	10:33	0041	004	030000000000060006	VEH KEY Opw Sys 2	355	Dsl1	02-1		$1.000	28.750	$28.75
7/21/2009	10:40	0045	004	030000000000060010	VEH KEY Opw Sys 2	600	Unld	01-1		$1.000	17.620	$17.62
7/21/2009	12:27	0050	004	030000000000060006	VEH KEY Opw Sys 2	575	Unld	01-1		$2.599	21.080	$54.79
7/21/2009	15:07	0065	004	030000000000060010	VEH KEY Opw Sys 2	1300	Unld	01-1		$2.599	20.220	$52.55
7/22/2009	08:47	0076	004	030000000000060008	VEH KEY Opw Sys 2	0000999	Unld	01-1		$2.599	12.070	$31.37
7/22/2009	09:35	0087	004	030000000000060007	VEH KEY Opw Sys 2	997	Unld	01-1		$2.599	25.040	$65.08
7/22/2009	10:03	0099	004	030000000000060010	VEH KEY Opw Sys 2	2002	Unld	01-1		$2.599	39.560	$102.82
7/22/2009	10:11	0103	004	030000000000060006	VEH KEY Opw Sys 2	1180	Unld	01-1		$2.599	26.190	$68.07
7/22/2009	10:25	0108	004	030000000000060010	VEH KEY Opw Sys 2	2300	Unld	01-1		$2.599	39.310	$102.17
7/22/2009	13:46	0119	004	0300005005	VEH KEY Opw K3000L	1756	Unld	01-1		$2.539	26.130	$66.34
7/22/2009	15:35	0135	004	03004005	VEH KEY Opw K800	1600	Unld	01-1		$2.539	36.060	$91.56
7/22/2009	15:57	0141	004	030000000000060010	VEH KEY Opw Sys 2	2600	Unld	01-1		$2.539	40.950	$103.97
7/22/2009	16:04	0145	004	030000000000060006	VEH KEY Opw Sys 2	1601	Dsl1	02-1		$2.459	27.250	$67.01
Card		**Transactions : 13**							**Avg Price :**	**$2.365**	**360.230**	**$852.10**
Driver :				**030000000000060003**	Driver SYS 2 FORMAT							
7/21/2009	10:35	0042	004	030000000000060007	VEH KEY Opw Sys 2	200	Unld	01-1		$1.000	15.200	$15.20
7/21/2009	12:19	0047	004	030000000000060009	VEH KEY Opw Sys 2	835	Dsl1	02-1		$2.499	22.600	$56.48
7/21/2009	12:23	0049	004	030000000000060007	VEH KEY Opw Sys 2	450	Dsl1	02-1		$2.499	20.100	$50.23
7/21/2009	15:14	0067	004	030000000000060008	VEH KEY Opw Sys 2	675	Unld	01-1		$2.599	50.290	$130.70
7/22/2009	08:50	0077	004	030000000000060007	VEH KEY Opw Sys 2	698	Unld	01-1		$2.599	21.470	$55.80
7/22/2009	09:36	0088	004	030000000000060008	VEH KEY Opw Sys 2	1206	Dsl1	02-1		$2.499	22.900	$57.23
7/22/2009	10:04	0100	004	030000000000060009	VEH KEY Opw Sys 2	1991	Dsl1	02-1		$2.499	39.350	$98.34
7/22/2009	15:38	0136	004	03004004	VEH KEY Opw K900	2001	Dsl1	02-1		$2.459	28.110	$69.12
7/22/2009	15:58	0142	004	030000000000060009	VEH KEY Opw Sys 2	2650	Dsl1	02-1		$2.459	39.790	$97.84
Card		**Transactions : 9**							**Avg Price :**	**$2.428**	**259.810**	**$630.94**
Driver :				**030000000000060004**	Driver SYS 2 FORMAT							
7/21/2009	10:36	0043	004	030000000000060008	VEH KEY Opw Sys 2	0000045	Dsl1	02-1		$1.000	10.110	$10.11

Printed on: Thursday September 03, 2009 at: 11:05:36AM

Page 1 of 7

Activity Detail by Vehicle (Card2)

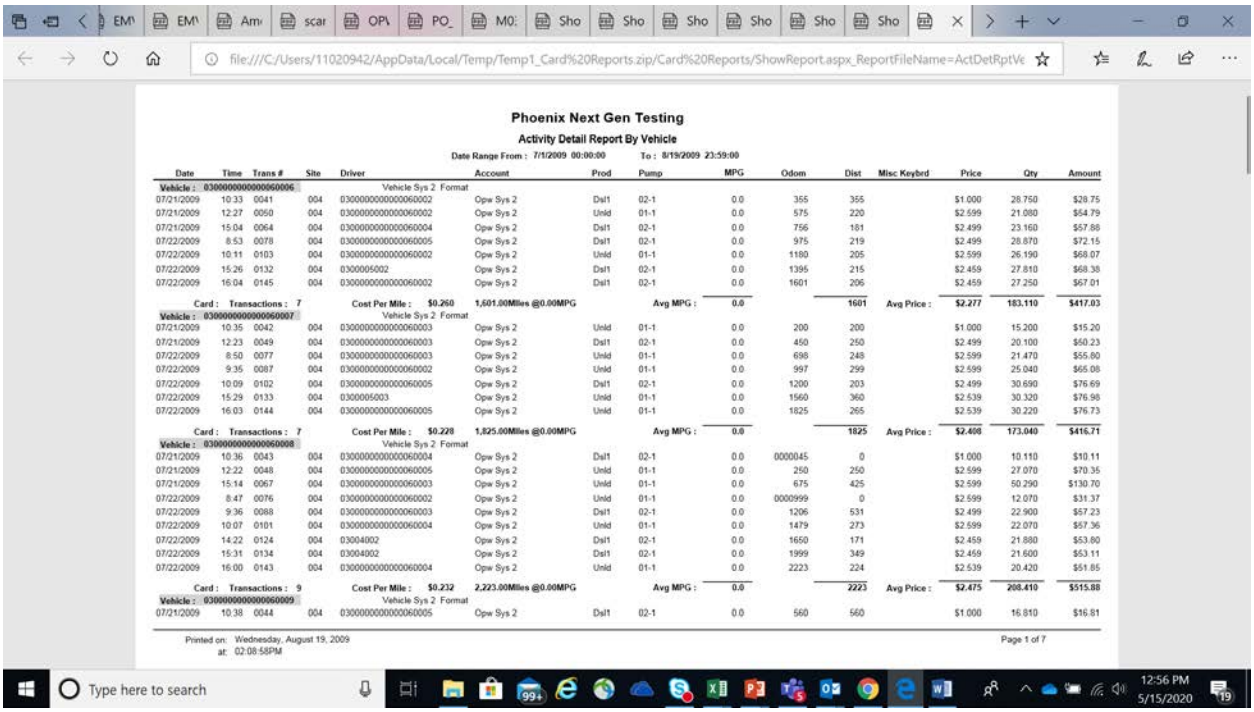

Phoenix Next Gen Testing

Activity Detail Report By Vehicle

Date Range From : 7/1/2009 00:00:00 To : 8/19/2009 23:59:00

Date	Time	Trans #	Site	Driver	Account	Prod	Pump	MPG	Odom	Dist	Misc Keybrd	Price	Qty	Amount
Vehicle :				**030000000000060006**	Vehicle Sys 2 Format									
07/21/2009	10:33	0041	004	030000000000060002	Opw Sys 2	Dsl1	02-1	0.0	355	355		$1.000	28.750	$28.75
07/21/2009	12:27	0050	004	030000000000060002	Opw Sys 2	Unld	01-1	0.0	575	220		$2.599	21.080	$54.79
07/21/2009	15:04	0064	004	030000000000060004	Opw Sys 2	Dsl1	02-1	0.0	756	181		$2.499	23.160	$57.86
07/22/2009	8:53	0078	004	030000000000060005	Opw Sys 2	Dsl1	02-1	0.0	975	219		$2.499	28.870	$72.15
07/22/2009	10:11	0103	004	030000000000060002	Opw Sys 2	Unld	01-1	0.0	1180	205		$2.599	26.190	$68.07
07/22/2009	15:26	0132	004	0300005002	Opw Sys 2	Dsl1	02-1	0.0	1395	215		$2.459	27.810	$68.38
07/22/2009	16:04	0145	004	030000000000060002	Opw Sys 2	Dsl1	02-1	0.0	1601	206		$2.459	27.250	$67.01
Card :		**Transactions : 7**		**Cost Per Mile : $0.260**	**1,601.00Miles @0.00MPG**		**Avg MPG :**	**0.0**		**1601**	**Avg Price :**	**$2.277**	**183.110**	**$417.03**
Vehicle :				**030000000000060007**	Vehicle Sys 2 Format									
07/21/2009	10:35	0042	004	030000000000060003	Opw Sys 2	Unld	01-1	0.0	200	200		$1.000	15.200	$15.20
07/21/2009	12:23	0049	004	030000000000060003	Opw Sys 2	Dsl1	02-1	0.0	450	250		$2.499	20.100	$50.23
07/22/2009	8:50	0077	004	030000000000060003	Opw Sys 2	Unld	01-1	0.0	698	248		$2.599	21.470	$55.80
07/22/2009	9:35	0087	004	030000000000060002	Opw Sys 2	Unld	01-1	0.0	997	299		$2.599	25.040	$65.08
07/22/2009	10:09	0102	004	030000000000060005	Opw Sys 2	Dsl1	02-1	0.0	1200	203		$2.499	30.690	$76.69
07/22/2009	15:29	0133	004	0300005003	Opw Sys 2	Unld	01-1	0.0	1560	360		$2.539	30.320	$76.98
07/22/2009	16:03	0144	004	030000000000060005	Opw Sys 2	Unld	01-1	0.0	1825	265		$2.539	30.220	$76.73
Card :		**Transactions : 7**		**Cost Per Mile : $0.228**	**1,825.00Miles @0.00MPG**		**Avg MPG :**	**0.0**		**1825**	**Avg Price :**	**$2.408**	**173.040**	**$416.71**
Vehicle :				**030000000000060008**	Vehicle Sys 2 Format									
07/21/2009	10:36	0043	004	030000000000060004	Opw Sys 2	Dsl1	02-1	0.0	0000045	0		$1.000	10.110	$10.11
07/21/2009	12:22	0048	004	030000000000060005	Opw Sys 2	Unld	01-1	0.0	250	250		$2.599	27.070	$70.35
07/21/2009	15:14	0067	004	030000000000060003	Opw Sys 2	Unld	01-1	0.0	675	425		$2.599	50.290	$130.70
07/22/2009	8:47	0076	004	030000000000060002	Opw Sys 2	Unld	01-1	0.0	0000999	0		$2.599	12.070	$31.37
07/22/2009	9:36	0088	004	030000000000060003	Opw Sys 2	Dsl1	02-1	0.0	1206	531		$2.499	22.900	$57.23
07/22/2009	10:07	0101	004	030000000000060004	Opw Sys 2	Unld	01-1	0.0	1479	273		$2.599	22.070	$57.36
07/22/2009	14:22	0124	004	03004002	Opw Sys 2	Dsl1	02-1	0.0	1650	171		$2.459	21.880	$53.80
07/22/2009	15:31	0134	004	03004002	Opw Sys 2	Dsl1	02-1	0.0	1999	349		$2.459	21.600	$53.11
07/22/2009	16:00	0143	004	030000000000060004	Opw Sys 2	Unld	01-1	0.0	2223	224		$2.539	20.420	$51.85
Card :		**Transactions : 9**		**Cost Per Mile : $0.232**	**2,223.00Miles @0.00MPG**		**Avg MPG :**	**0.0**		**2223**	**Avg Price :**	**$2.475**	**208.410**	**$515.88**
Vehicle :				**030000000000060009**	Vehicle Sys 2 Format									
07/21/2009	10:38	0044	004	030000000000060005	Opw Sys 2	Dsl1	02-1	0.0	560	560		$1.000	16.810	$16.81

Printed on: Wednesday, August 19, 2009 at: 02:08:58PM

Page 1 of 7

Activity Detail by Account by Driver

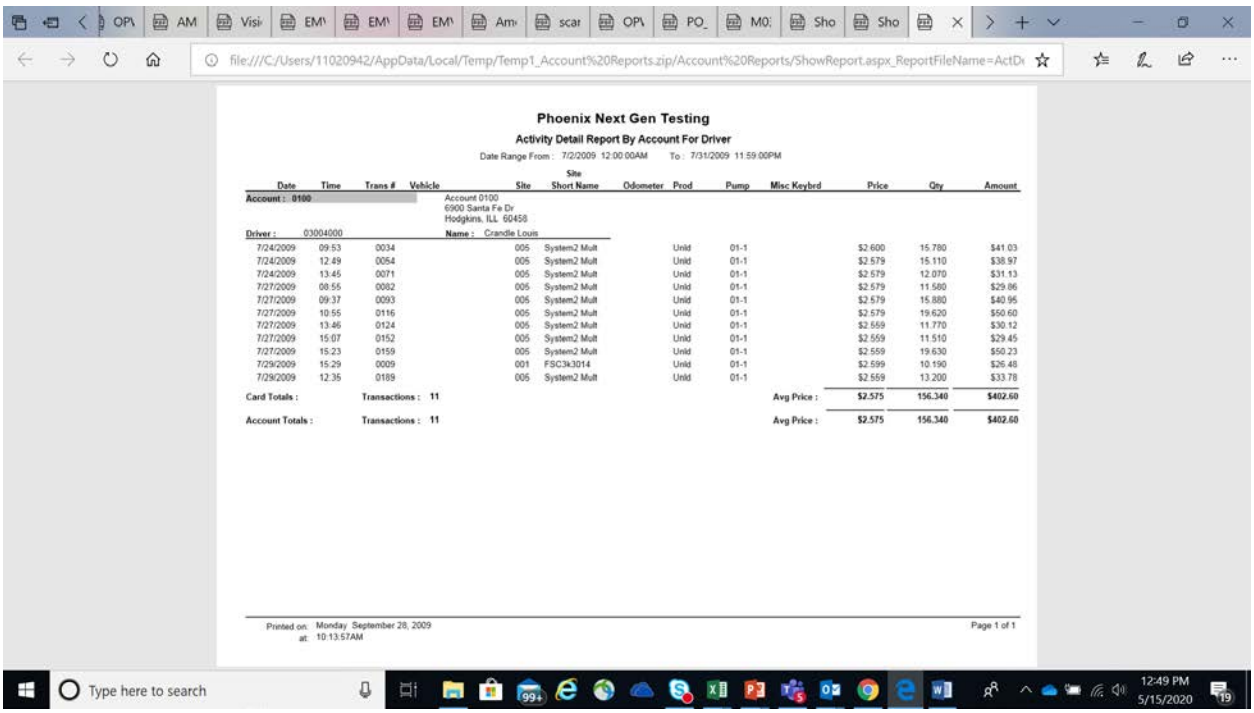

Phoenix Next Gen Testing

Activity Detail Report By Account For Driver

Date Range From : 7/2/2009 12:00:00AM To : 7/31/2009 11:59:00PM

Date	Time	Trans #	Vehicle	Site	Short Name	Odometer	Prod	Pump	Misc Keybrd	Price	Qty	Amount
Account : 0100			Account 0100 6900 Santa Fe Dr Hodgkins, ILL 60458									
Driver :	03004000		**Name :** Crandle Louis									
7/24/2009	09:53	0034		005	System2 Mult		Unld	01-1		$2.600	15.780	$41.03
7/24/2009	12:49	0054		005	System2 Mult		Unld	01-1		$2.579	15.110	$38.97
7/24/2009	13:45	0071		005	System2 Mult		Unld	01-1		$2.579	12.070	$31.13
7/27/2009	08:55	0082		005	System2 Mult		Unld	01-1		$2.579	11.580	$29.86
7/27/2009	09:37	0093		005	System2 Mult		Unld	01-1		$2.579	15.880	$40.95
7/27/2009	10:55	0116		005	System2 Mult		Unld	01-1		$2.579	19.620	$50.60
7/27/2009	13:46	0124		005	System2 Mult		Unld	01-1		$2.559	11.770	$30.12
7/27/2009	15:07	0152		005	System2 Mult		Unld	01-1		$2.559	11.510	$29.45
7/27/2009	15:23	0159		005	System2 Mult		Unld	01-1		$2.559	19.630	$50.23
7/29/2009	15:29	0009		001	FSC3k3014		Unld	01-1		$2.599	10.190	$26.48
7/29/2009	12:35	0189		005	System2 Mult		Unld	01-1		$2.559	13.200	$33.78
Card Totals :		**Transactions :**	**11**						**Avg Price :**	**$2.575**	**156.340**	**$402.60**
Account Totals :		**Transactions :**	**11**						**Avg Price :**	**$2.575**	**156.340**	**$402.60**

Printed on: Monday September 28, 2009
at: 10:13:57AM

Page 1 of 1

Activity Detail by Account by Vehicle

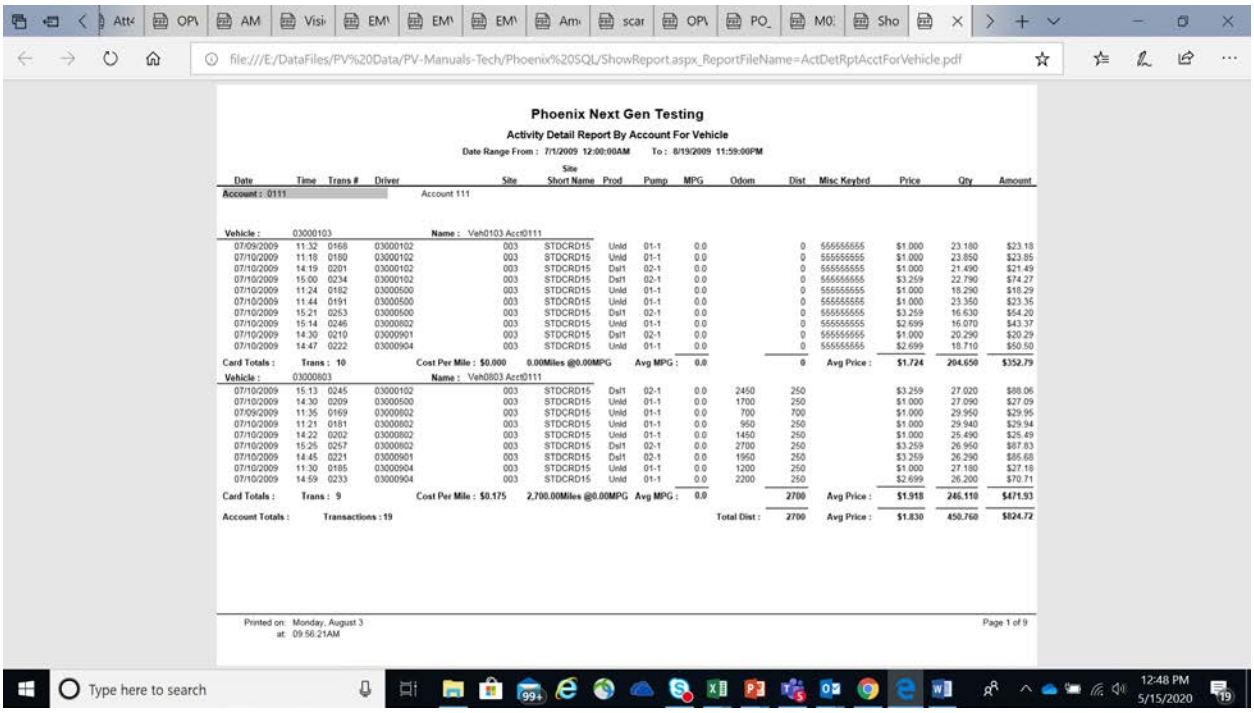

Phoenix Next Gen Testing

Activity Detail Report By Account For Vehicle

Date Range From : 7/1/2009 12:00:00AM To : 8/19/2009 11:59:00PM

Date	Time	Trans #	Driver	Site	Short Name	Prod	Pump	MPG	Odom	Dist	Misc Keybrd	Price	Qty	Amount
Account : 0111			Account 111											
Vehicle :	03000103		**Name :** Veh0103 Acct0111											
07/09/2009	11:32	0168	03000102	003	STDCRD15	Unld	01-1	0.0		0	555555555	$1.000	23.180	$23.18
07/10/2009	11:18	0180	03000102	003	STDCRD15	Unld	01-1	0.0		0	555555555	$1.000	23.850	$23.85
07/10/2009	14:19	0201	03000102	003	STDCRD15	Dsl1	02-1	0.0		0	555555555	$1.000	21.490	$21.49
07/10/2009	15:00	0234	03000102	003	STDCRD15	Dsl1	02-1	0.0		0	555555555	$3.259	22.790	$74.27
07/10/2009	11:24	0182	03000500	003	STDCRD15	Unld	01-1	0.0		0	555555555	$1.000	18.290	$18.29
07/10/2009	11:44	0191	03000500	003	STDCRD15	Unld	01-1	0.0		0	555555555	$1.000	23.350	$23.35
07/10/2009	15:21	0253	03000500	003	STDCRD15	Dsl1	02-1	0.0		0	555555555	$3.259	16.630	$54.20
07/10/2009	15:14	0246	03000802	003	STDCRD15	Unld	01-1	0.0		0	555555555	$2.699	16.070	$43.37
07/10/2009	14:30	0210	03000901	003	STDCRD15	Dsl1	02-1	0.0		0	555555555	$1.000	20.290	$20.29
07/10/2009	14:47	0222	03000904	003	STDCRD15	Unld	01-1	0.0		0	555555555	$2.699	18.710	$50.50
Card Totals :	**Trans : 10**		**Cost Per Mile : $0.000**	**0.00Miles @0.00MPG**			**Avg MPG :**	**0.0**		**0**	**Avg Price :**	**$1.724**	**204.650**	**$352.79**
Vehicle :	03000803		**Name :** Veh0803 Acct0111											
07/10/2009	15:13	0245	03000102	003	STDCRD15	Dsl1	02-1	0.0	2450	250		$3.259	27.020	$88.06
07/10/2009	14:30	0209	03000500	003	STDCRD15	Unld	01-1	0.0	1700	250		$1.000	27.090	$27.09
07/09/2009	11:35	0169	03000802	003	STDCRD15	Unld	01-1	0.0	700	700		$1.000	29.950	$29.95
07/10/2009	11:21	0181	03000802	003	STDCRD15	Unld	01-1	0.0	950	250		$1.000	29.940	$29.94
07/10/2009	14:22	0202	03000802	003	STDCRD15	Unld	01-1	0.0	1450	250		$1.000	25.490	$25.49
07/10/2009	15:25	0257	03000802	003	STDCRD15	Dsl1	02-1	0.0	2700	250		$3.259	26.950	$87.83
07/10/2009	14:45	0221	03000901	003	STDCRD15	Dsl1	02-1	0.0	1950	250		$3.259	26.290	$85.68
07/10/2009	11:30	0185	03000904	003	STDCRD15	Unld	01-1	0.0	1200	250		$1.000	27.180	$27.18
07/10/2009	14:59	0233	03000904	003	STDCRD15	Unld	01-1	0.0	2200	250		$2.699	26.200	$70.71
Card Totals :	**Trans : 9**		**Cost Per Mile : $0.175**	**2,700.00Miles @0.00MPG**			**Avg MPG :**	**0.0**		**2700**	**Avg Price :**	**$1.918**	**246.110**	**$471.93**
Account Totals :		**Transactions : 19**							**Total Dist :**	**2700**	**Avg Price :**	**$1.830**	**450.760**	**$824.72**

Printed on: Monday, August 3
at: 09:56:21AM

Page 1 of 9

Product Totals by Site

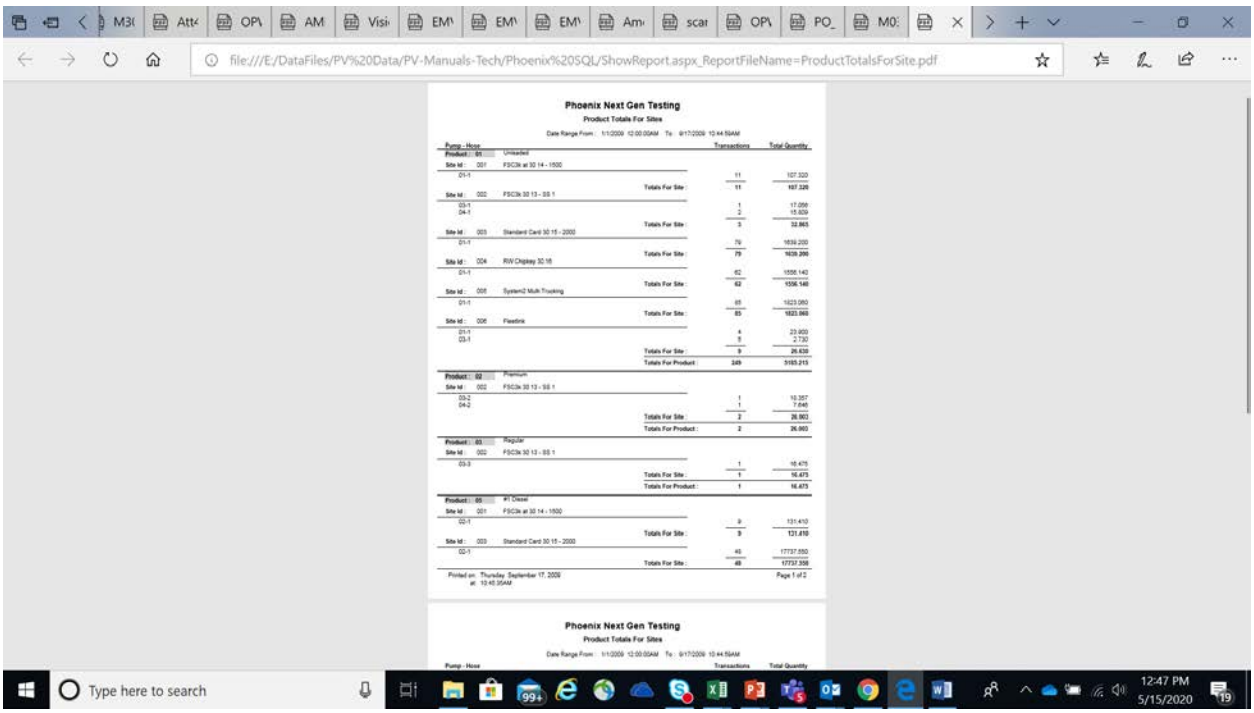

Pump Totals by Site

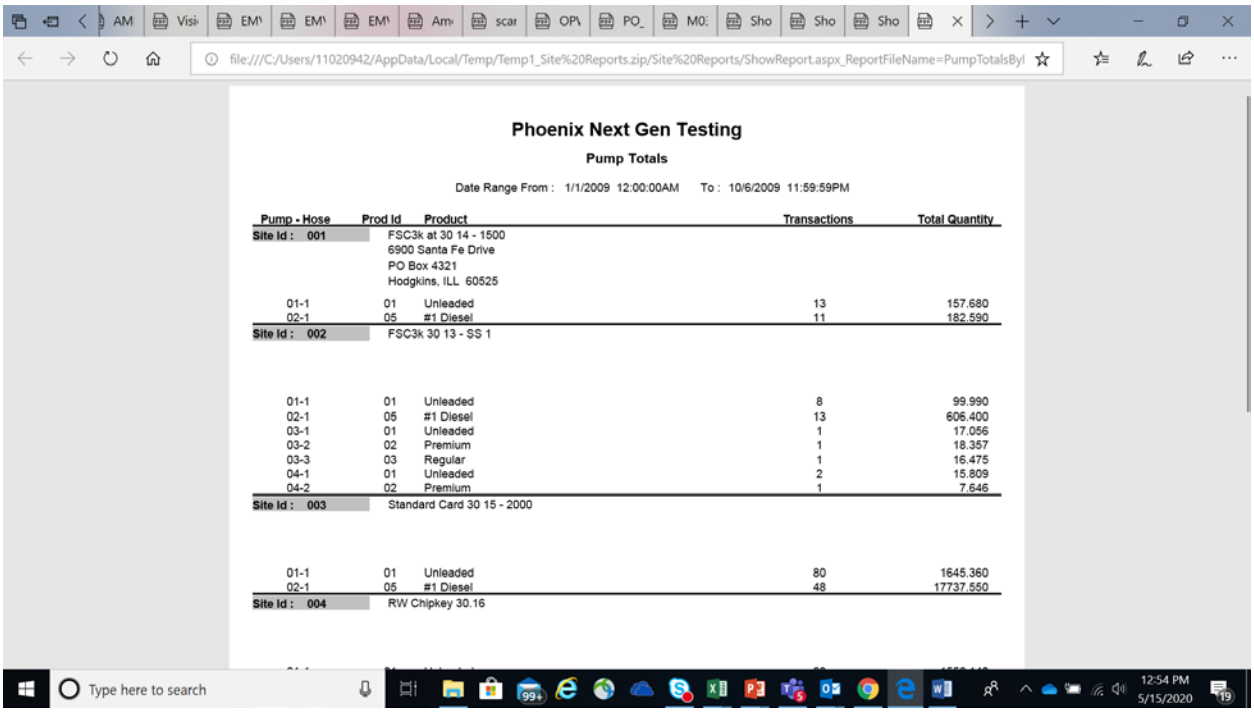

Network Transactions by Card Type

Network Transactions by Site

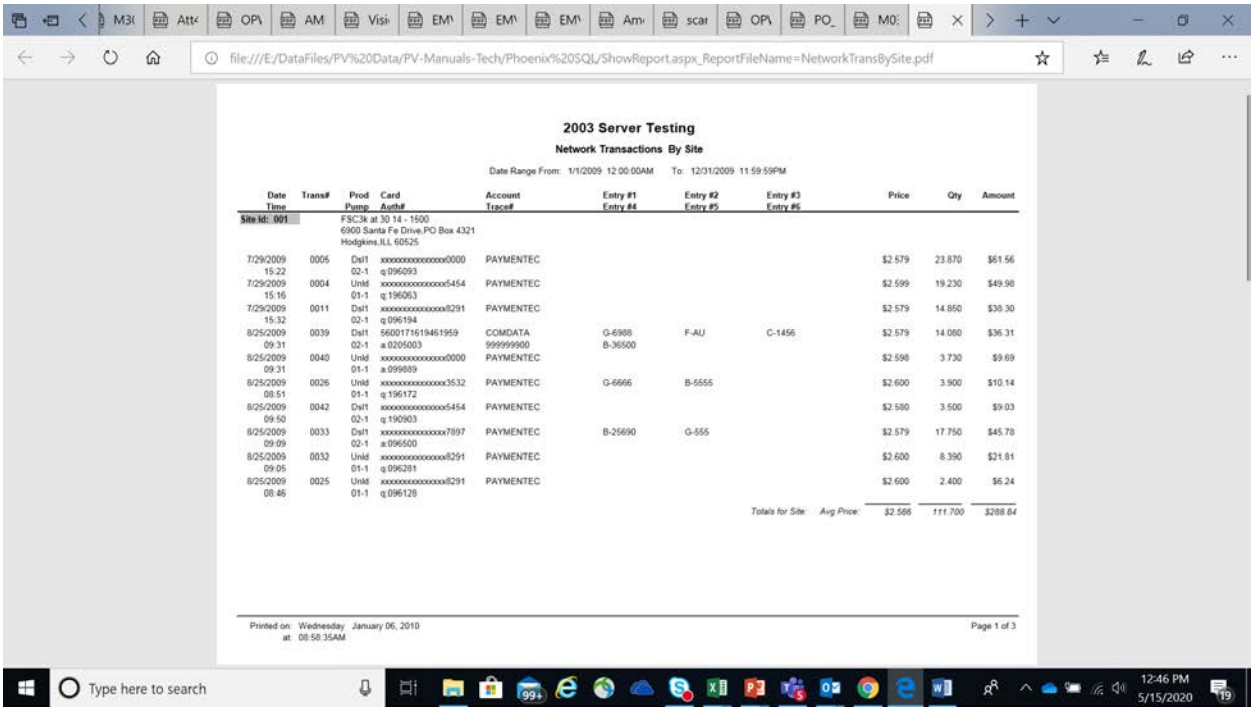

2003 Server Testing

Network Transactions By Site

Date Range From: 1/1/2009 12:00:00AM To: 12/31/2009 11:59:59PM

Date Time	Trans#	Prod Pump	Card Auth#	Account Trace#	Entry #1 Entry #4	Entry #2 Entry #5	Entry #3 Entry #6	Price	Qty	Amount
Site Id: 001		FSC3k at 30 14 - 1500 6900 Santa Fe Drive,PO Box 4321 Hodgkins,ILL 60525								
7/29/2009 15:22	0005	Dsl1 02-1	xxxxxxxxxxxxxx0000 q:096093	PAYMENTEC				$2.579	23.870	$61.56
7/29/2009 15:16	0004	Unld 01-1	xxxxxxxxxxxxxx5454 q:196063	PAYMENTEC				$2.599	19.230	$49.98
7/29/2009 15:32	0011	Dsl1 02-1	xxxxxxxxxxxxxx8291 q:096194	PAYMENTEC				$2.579	14.850	$38.30
8/25/2009 09:31	0039	Dsl1 02-1	5600171619461959 a:0205003	COMDATA 999999900	G-6988 B-36500	F-AU	C-1456	$2.579	14.080	$36.31
8/25/2009 09:31	0040	Unld 01-1	xxxxxxxxxxxxxx0000 a:099889	PAYMENTEC				$2.598	3.730	$9.69
8/25/2009 08:51	0026	Unld 01-1	xxxxxxxxxxxxxx3532 q:196172	PAYMENTEC	G-6666	B-5555		$2.600	3.900	$10.14
8/25/2009 09:50	0042	Dsl1 02-1	xxxxxxxxxxxxxx5454 q:190903	PAYMENTEC				$2.580	3.500	$9.03
8/25/2009 09:09	0033	Dsl1 02-1	xxxxxxxxxxxxxx7897 a:096500	PAYMENTEC	B-25690	G-555		$2.579	17.750	$45.78
8/25/2009 09:05	0032	Unld 01-1	xxxxxxxxxxxxxx8291 q:096281	PAYMENTEC				$2.600	8.390	$21.81
8/25/2009 08:46	0025	Unld 01-1	xxxxxxxxxxxxxx8291 q:096128	PAYMENTEC				$2.600	2.400	$6.24
							Totals for Site: Avg Price:	*$2.586*	*111.700*	*$288.84*

Printed on: Wednesday January 06, 2010 at: 08:58:35AM

Page 1 of 3

Odometer Exceptions

DOVER FUELING SOLUTIONS	Exhibit B – Site Location For any questions about your subscription agreement, contact a representative at global.saasopssupport@doverfs.com. For any questions about payment and billing contact a representative at Dbs_na_ar_inquiries@dovercorp.com. Thank you.

Site Location Information (site name and location that DX Fleet will be deployed at)

Site Name:	Huefano County Road & Bridge
Street Address:	1010 S. Main St
City:	Walsenburg
State:	CO
Zip:	81089
Country:	U.S.A.
MNSP (Managed Network Service Provider.):	

Subscription Service User Information (can have multiple users per site)

Enter all of the names of the people who need user accounts to login / access the subscription service online (i.e. DX Fleet). All users will have the same permissions within DX Fleet with the exception of the designated Org Admin(s).

- Org Admin: This role is assigned to a person (or select few people) in an organization as the designated delegate. The Org Admin is allowed to modify organization-wide settings and preferences as well as add/remove users for DX Fleet access within their organization as it is configured within the DFS DX solutions suite / cloud platform.

First Name	Last Name	Corresponding Company Email Address	Phone Number	Org Admin

DOVER FUELING SOLUTIONS	Exhibit C – Site Location For any questions about your subscription agreement, contact a representative at global.saasopssupport@doverfs.com. For any questions about payment and billing contact a representative at Dbs_na_ar_inquiries@dovercorp.com. Thank you.

Site Location Information (site name and location that DX Fleet will be deployed at)

Site Name:	Huefano County Road & Bridge
Street Address:	1010 S. Main St
City:	Walsenburg
State:	CO
Zip:	81089
Country:	U.S.A.
MNSP (Managed Network Service Provider.):	

Subscription Service User Information (can have multiple users per site)

Enter all of the names of the people who need user accounts to login / access the subscription service online (i.e. DX Fleet). All users will have the same permissions within DX Fleet with the exception of the designated Org Admin(s).

- Org Admin: This role is assigned to a person (or select few people) in an organization as the designated delegate. The Org Admin is allowed to modify organization-wide settings and preferences as well as add/remove users for DX Fleet access within their organization as it is configured within the DFS DX solutions suite / cloud platform.

First Name	Last Name	Corresponding Company Email Address	Phone Number	Org Admin
				☐
				☐
				☐
				☐

DOVER FUELING SOLUTIONS	Exhibit D – Site Location For any questions about your subscription agreement, contact a representative at global.saasopssupport@doverfs.com. For any questions about payment and billing contact a representative at Dbs_na_ar_inquiries@dovercorp.com. Thank you.

Site Location Information (site name and location that DX Fleet will be deployed at)

Site Name:	Huefano County Road & Bridge
Street Address:	1010 S. Main St
City:	Walsenburg
State:	CO
Zip:	81089
Country:	U.S.A.
MNSP (Managed Network Service Provider.):	

Subscription Service User Information (can have multiple users per site)

Enter all of the names of the people who need user accounts to login / access the subscription service online (i.e. DX Fleet). All users will have the same permissions within DX Fleet with the exception of the designated Org Admin(s).

- Org Admin: This role is assigned to a person (or select few people) in an organization as the designated delegate. The Org Admin is allowed to modify organization-wide settings and preferences as well as add/remove users for DX Fleet access within their organization as it is configured within the DFS DX solutions suite / cloud platform.

First Name	Last Name	Corresponding Company Email Address	Phone Number	Org Admin

DOVER FUELING SOLUTIONS	Exhibit E – Site Location For any questions about your subscription agreement, contact a representative at global.saasopssupport@doverfs.com. For any questions about payment and billing contact a representative at Dbs_na_ar_inquiries@dovercorp.com. Thank you.

Site Location Information (site name and location that DX Fleet will be deployed at)

Site Name:	Huefano County Road & Bridge
Street Address:	1010 S. Main St
City:	Walsenburg
State:	CO
Zip:	81089
Country:	U.S.A.
MNSP (Managed Network Service Provider.):	

Subscription Service User Information (can have multiple users per site)

Enter all of the names of the people who need user accounts to login / access the subscription service online (i.e. DX Fleet). All users will have the same permissions within DX Fleet with the exception of the designated Org Admin(s).

- Org Admin: This role is assigned to a person (or select few people) in an organization as the designated delegate. The Org Admin is allowed to modify organization-wide settings and preferences as well as add/remove users for DX Fleet access within their organization as it is configured within the DFS DX solutions suite / cloud platform.

First Name	Last Name	Corresponding Company Email Address	Phone Number	Org Admin
				☐
				☐
				☐
				☐

DOVER FUELING SOLUTIONS	Exhibit F – Site Location For any questions about your subscription agreement, contact a representative at global.saasopssupport@doverfs.com. For any questions about payment and billing contact a representative at Dbs_na_ar_inquiries@dovercorp.com. Thank you.

Site Location Information (site name and location that DX Fleet will be deployed at)

Site Name:	Huefano County Road & Bridge
Street Address:	1010 S. Main St
City:	Walsenburg
State:	CO
Zip:	81089
Country:	U.S.A.
MNSP (Managed Network Service Provider.):	

Subscription Service User Information (can have multiple users per site)

Enter all of the names of the people who need user accounts to login / access the subscription service online (i.e. DX Fleet). All users will have the same permissions within DX Fleet with the exception of the designated Org Admin(s).

- Org Admin: This role is assigned to a person (or select few people) in an organization as the designated delegate. The Org Admin is allowed to modify organization-wide settings and preferences as well as add/remove users for DX Fleet access within their organization as it is configured within the DFS DX solutions suite / cloud platform.

First Name	Last Name	Corresponding Company Email Address	Phone Number	Org Admin

SPANISH PEAKS HARP RETREAT, INC.

http://www.spanishpeaksharpretreat.com

August 6, 2021

Carl Young
County Administrator
Huerfano County, Colorado

As the head of the Spanish Peaks Harp Retreat, a 501C3 organization, I would like to request a waiver of the usual fees for the use of the Community Center from Wednesday, September 22-Sunday September 26, 2021. This would be for the use of 2-3 spaces on each of these days.

Regards,

Nancy Joroff

			Correspondence	
				August 17, 2021
ITEM		**DATE**	**FROM**	**SUBJECT**
33	A	9-Aug	CTSI	CONFIDENTIAL CAPP Monthly Report
33	B	10-Aug	CTSI	Fleas Plague Colorado
33	C	10-Aug	HC Treasurer	Monthly Reports

33-A

CONFIDENTIAL

CTSI

CAPP Monthly Reports

33-B

TECHNICAL UPDATE

CTSI
Serving Colorado's Counties

Volume 25 Number 32 August 10, 2021

Fleas Plague Colorado

The Colorado Department of Public Health and Environment (CDPHE) has confirmed plague (Yersinia pestis) in animals and fleas from six counties after the death of a 10-year-old boy in LaPlata County. Plague is a zoonotic disease, which means it can pass from animals to humans. The Yersinia pestis bacteria is usually found in fleas and small mammals such as prairie dogs, squirrels, woodrats, and chipmunks. Pets can also carry plague-infested fleas.

SYMPTOMS OF PLAGUE

Plague cases are rare in humans and can be treated if caught early, so it is vital to know the symptoms and seek treatment if plague is suspected. Plague symptoms depend on the clinical form: bubonic, pneumonic, or septicemic (https://www.cdc.gov/plague/symptoms/index.html).

Bubonic – sudden fever, headache, chills, weakness, and swollen tender lymph nodes

Septicemic – fever, chills, extreme weakness, abdominal pain, shock, and possibly bleeding into the skin and other organs; skin and other tissues (e.g., fingers, toes, nose, etc.) may turn black and die

Pneumonic – fever, headache, weakness, and rapidly developing pneumonia with shortness of breath, chest pain, cough, and sometimes bloody or watery mucous

CONTROL EXPOSURE RISKS

Animal-borne diseases can be contracted year-round but tend to increase in summer when people are more likely to come into contact with animals. The CDPHE recommends Coloradans take the following precautions (https://cdphe.colorado.gov/press-release/plague-activity-identified-in-colorado):

- Avoid fleas. Protect pets with a veterinary-approved flea treatment and keep them on a leash and out of wild rodent habitats.
- Stay out of areas where wild rodents live. If you enter areas inhabited by wild rodents, wear insect repellent and tuck your pant cuffs into your socks to prevent flea bites.
- Avoid all contact with wild rodents, including squirrels. Do not feed or handle them.
- Do not touch sick or dead animals.
- Prevent rodent infestations around your house by clearing plants and materials away from outside walls, reducing access to food items, and setting traps.
- Consult with a professional pest control company to treat the area around your home for fleas.
- Contact a veterinarian if your pet becomes ill with a high fever and/or an abscess (i.e., open sore) or swollen lymph nodes. Pets with plague can transmit the illness to humans.
- Children should be aware of these precautions and know to tell an adult if they have had contact with a wild animal or were bitten by fleas.

WHAT THIS MEANS FOR COUNTIES

Coloradans should take steps to avoid coming in contact with fleas and small mammals that often carry Yersinia pestis. Know the symptoms of plague and seek medical attention if they appear. For more information, consult the CDPHE or the CDC.

33-C

HUERFANO COUNTY

HC TREASURER

JULY 2021 MONTHLY REPORTS

401 Main Street, Suite 206

Walsenburg, CO 81089

Phone: 719-738-3000 Ext 505

ACCT	DESCRIPTION	BALANCE FORWRD	CURRENT	TOTAL YTD	PROJ REV	BALANCE	PCT
0010	COUNTY GENERAL FUND	1878797.74					
0010	FUND TOTALS	3140610.00	97970.49-	3042639.51	2293653.39	129976.91	94.33
0012	JUDICIAL SALES TAX 1/1/2020	235220.18					
0012	FUND TOTALS	3004.60	.00	3004.60			
0014	UNCLAIMED	9986.76					
0014	FUND TOTALS	935.48	248.15-	687.33			
0015	SPECIAL PROJECT FUND	.00					
0015	FUND TOTALS	931912.33	23939.02-	907973.31			
0020	ROAD & BRIDGE	257525.85					
0020	FUND TOTALS	190414.00	262075.46	452489.46	13340.64	756.22	94.33
0025	LEASE PURCHASE FUND	.00					
0025	FUND TOTALS	.00	.00	.00			
0028	EMERGENCY SERVICES FUNDS (DISPATCH)	918809.83					
0028	FUND TOTALS	630240.61	36301.17	666541.78			
0030	RETIREMENT	112689.99					
0030	FUND TOTALS	167713.55	7456.18-	160257.37	119917.67	6795.47	94.33
0035	LODGING TAX TOURISM FUND	30530.54					
0035	FUND TOTALS	33428.64	.00	33428.64			
0040	DISASTER RECOVERY FUND	462557.21					
0040	FUND TOTALS	659119.35	14710.29	673829.64			
0045	GARDNER PUBLIC IMPROVEMENT DISTRICT	21077.43					
0045	FUND TOTALS	21306.50	4462.16-	16844.34			
0051	WALSENBURG GATEWAY METRO DIST	.00					
0051	FUND TOTALS	.00	.00	.00			
0080	SPANISH PEAKS LIBRARY DIST	2215.71					
0080	FUND TOTALS	30402.20	23519.07-	6883.13	229418.20	11605.07	94.94
0081	SPANISH PEAKS LIBARY DIST (BOND)	1961.96					
0081	FUND TOTALS	27000.09	20948.25-	6051.84	203823.62	10311.01	94.94
0090	HUERFANO CO. AMBULANCE ENTERPRISE	.00					
0090	FUND TOTALS	.00	.00	.00			
0095	WASTE TRANSFER STATION ENTERPRISE	54067.85					
0095	FUND TOTALS	57882.37	367.70-	57514.67			
0100	MINERAL LEASING	.00					
0100	FUND TOTALS	.00	.00	.00			
0105	CREDIT CARD ADJ FUND	.00					
0105	FUND TOTALS	.00	.00	.00			
0110	PUBLIC TRUSTEE	.00					
0110	FUND TOTALS	.00	.00	.00			

ACCT	DESCRIPTION	BALANCE FORWRD	CURRENT	TOTAL YTD	PROJ REV	BALANCE	PCT
0120	SOCIAL SERVICES	659036.09					
0120	FUND TOTALS	732475.35	49934.87	782410.22	333108.73	18876.63	94.33
0130	HOSPITAL DISTRICT (OPERATING)	9247.54					
0130	FUND TOTALS	124324.94	93227.14-	31097.80	932698.18	52839.50	94.33
0140	HOSPITAL ANTIC. WARRANTS (BOND)	.00					
0140	FUND TOTALS	.00	.00	.00			
0160	CITY OF WALSENBURG	67734.55					
0160	FUND TOTALS	66319.23	26406.68-	39912.55	268412.53	20754.43	92.26
0165	WALSENBURG TIF	80.38					
0165	FUND TOTALS	3171.60	2213.92-	957.68	25500.88	1813.53	92.88
0170	WAL (DOWNTOWN REV COMM) GID 28018	32.38					
0170	FUND TOTALS	15.58	.00	15.58			
0180	TOWN OF LAVETA	10711.89					
0180	FUND TOTALS	18143.74	3987.13-	14156.61	42759.67	2899.90	93.21
0190	LA VETA FIRE PROT. DIST.	2077.11					
0190	FUND TOTALS	26070.82	17585.29-	8485.53	191920.45	14498.75	92.44
0200	LA VETA CEMETERY DIST	189.76					
0200	FUND TOTALS	2381.47	1606.33-	775.14	17532.62	1325.12	92.44
0210	HUERFANO WATER CONS. DIST.	2812.08					
0210	FUND TOTALS	37772.10	28321.86-	9450.24	283171.92	15950.30	94.36
0220	NAVAJO WATER DIST.	327.34					
0220	FUND TOTALS	4844.12	3908.96-	935.16	33179.55	2003.22	93.96
0230	CUCHARA SAN. WATER DIST.	892.50					
0230	FUND TOTALS	11857.72	9777.03-	2080.69	92822.26	4365.02	95.29
0240	LA VETA LIB. DIST.	2071.88					
0240	FUND TOTALS	25991.92	17532.03-	8459.89	191338.28	14454.50	92.44
0250	RYE FIRE DIST.	78.75					
0250	FUND TOTALS	1268.78	1099.92-	168.86	8015.78	736.65	90.81
0260	ECONNOMIC & REVOLVING LOAN	.00					
0260	FUND TOTALS	.00	.00	.00			
0270	CUCHARA BOND	.00					
0270	FUND TOTALS	.00	.00	.00			
0280	UPPER HUERFANO CONSERVATION DIST	379.69					
0280	FUND TOTALS	5502.92	4231.93-	1270.99	44788.10	2146.22	95.20
0290	UPPER HUERFANO FIRE DIST.	1233.76					
0290	FUND TOTALS	10573.22	3927.83-	6645.39	117613.60	8617.45	92.67
0300	HUERFANO CO FIRE PROTECTION DIST	4099.70					
0300	FUND TOTALS	59263.63	48744.52-	10519.11	422502.83	19509.73	95.38

ACCT	DESCRIPTION	BALANCE FORWRD	CURRENT	TOTAL YTD	PROJ REV	BALANCE	PCT
0310	COUNTY CLERK	158188.67					
0310	FUND TOTALS	183854.58	67659.40	251513.98			
0311	COUNTY CLERK SUR CHARGE	3347.61					
0311	FUND TOTALS	4402.61	251.26-	4151.35			
0320	SCHOOL DIST. RE-1 GENERAL	26776.14					
0320	FUND TOTALS	76852.01	6411.12	83263.13	2732380.97	138216.53	94.94
0330	SCHOOL DIST. RE-1 CAP. RES.	.00					
0330	FUND TOTALS	.00	.00	.00			
0340	SCHOOL DIST. RE-1 BOND	4504.02					
0340	FUND TOTALS	57513.13	44719.23-	12793.90	421727.34	21332.87	94.94
0350	SCHOOL DIST. RE-1 INSURANCE REV.	.47					
0350	FUND TOTALS	.47	.00	.47			
0360	SCHOOL DIST. RE-2 GENERAL	9252.18					
0360	FUND TOTALS	46775.23	8243.97-	38531.26	852142.11	64373.22	92.44
0370	SCHOOL DIST. RE-2 CAP. RES.	.00					
0370	FUND TOTALS	.00	.00	.00			
0380	SCHOOL DIST. RE-2 BOND	4749.22					
0380	FUND TOTALS	64035.29	43283.51-	20751.78	458014.65	34599.73	92.44
0390	TAX SALE & REDEMPTIONS	7948.40					
0390	FUND TOTALS	8506.93	13.64	8520.57			
0410	BACK TAX UNAPPORTIONED	.00					
0410	FUND TOTALS	.00	.00	.00			
0420	FEDERAL FOREST PROJECT FUND	41966.17					
0420	FUND TOTALS	57577.97	3382.50-	54195.47			
0430	XXXX	.00					
0430	FUND TOTALS	.00	.00	.00			
0440	TREASURERS FEES	.00					
0440	FUND TOTALS	.00	.00	.00			
0450	SPECIFIC OWNERSHIP	.00					
0450	FUND TOTALS	.00	.00	.00			
0460	LAND USE FUND	.00					
0460	FUND TOTALS	559892.00	.00	559892.00			
0470	CONSERVATION TRUST FUND	14605.13					
0470	FUND TOTALS	19147.15	2191.11-	16956.04			
0480	MOTOR VEHICLE	.00					
0480	FUND TOTALS	.00	.00	.00			
0490	FEDERAL LAND & MATERIALS ACT	367.59					
0490	FUND TOTALS	367.59	.00	367.59			

ACCT	DESCRIPTION	BALANCE FORWRD	CURRENT	TOTAL YTD	PROJ REV	BALANCE	PCT
0500	US FOREST RESERVE	4620.00					
0500	FUND TOTALS	4620.00	.00	4620.00			
0510	NAVAJO BOND	.00					
0510	FUND TOTALS	.00	.00	.00			
0520	WALSENBURG HOUSING AUTHORITY	.00					
0520	FUND TOTALS	.00	.00	.00			
0540	ADVANCE TAX COLLECTIONS	13897.49					
0540	FUND TOTALS	8168.57	454.43	8623.00			
0550	COUNTY PROPERTY SALES	.00					
0550	FUND TOTALS	765.00	.00	765.00			
0560	PILT	253771.63					
0560	FUND TOTALS	554296.55	344525.29-	209771.26			
0570	REAL ESTATE INT.UNAPPORTIONED	.00					
0570	FUND TOTALS	.00	.00	.00			
0590	BUSINESS RECRUITMENT FUND	.00					
0590	FUND TOTALS	.00	.00	.00			
0600	COURT HOUSE RE-HAB	.00					
0600	FUND TOTALS	.00	.00	.00			
0610	PURGATOIRE RIVER SOIL CONS. DIST.	.42					
0610	FUND TOTALS	.35	.05	.40	4.71	.00	100.00
0660	BUSINESS RECRUITMENT	.00					
0660	FUND TOTALS	.00	.00	.00			
0690	EMERGENCY RESERVE FUND	.00					
0690	FUND TOTALS	.00	.00	.00			
	******** FUND TOTALS ********	8670722.29	450518.03-	8220204.26	10329788.68	598757.98	94.20

ACCT DESCRIPTION	BALANCE FORWRD	CURRENT	TOTAL YTD	PROJ REV	BALANCE	PCT

TIME FINISHED-09:13

ACCT	DESCRIPTION	BALANCE FORWRD	CURRENT	TOTAL YTD	PROJ REV	BALANCE	PCT
9000	COMMUNITY BANKS OF SO COLORADO	850475.59					
9000	FUND TOTALS	272200.90	355943.76	628144.66			
9100	TREASURERS CASH	700.00					
9100	FUND TOTALS	700.00	.00	700.00			
9200	COLO TRUST (INVESTMENT)	1026487.24					
9200	FUND TOTALS	1026835.79	28.47	1026864.26			
9300	BANK OF THE WEST OPERATING ACCT	183781.46					
9300	FUND TOTALS	1887188.85	804337.20-	1082851.65			
9350	BANK OF THE WEST MM ACCT	252273.64					
9350	FUND TOTALS	1552303.96	13.18	1552317.14			
9375	BANK OF THE WEST CD START 3/29/18	300000.00					
9375	FUND TOTALS	300000.00	.00	300000.00			
9400	HCB CD START 4/18/13-CLOSED 4/25/19	.00					
9400	FUND TOTALS	.00	.00	.00			
9500	HUERFANO CONSERVATION TRUST FUND	14605.13					
9500	FUND TOTALS	19147.15	2191.11-	16956.04			
9600	CSAFE (INVESTMENT)	265882.14					
9600	FUND TOTALS	1216020.92	19.31	1216040.23			
9650	PEAKS INVESTMENTS MANAGEMENT	200000.00					
9650	FUND TOTALS	508694.21	.00	508694.21			
9700	LPL FINANCIAL	1566800.29					
9700	FUND TOTALS	1566800.29	.00	1566800.29			
9800	WELLS FARGO (TRANSFD TO PEAKS INV)	308694.21					
9800	FUND TOTALS	.00	.00	.00			
9900	PFM FUNDS - CSIP (START 2/26/13)	320741.89					
9900	FUND TOTALS	320830.22	5.56	320835.78			
	******** FUND TOTALS ********	8670722.29	450518.03-	8220204.26			

ACCT DESCRIPTION	BALANCE FORWRD	CURRENT	TOTAL YTD	PROJ REV	BALANCE	PCT

TIME FINISHED-09:08

ACCT	DESCRIPTION	BALANCE FORWRD	CURRENT	TOTAL YTD	PROJ REV	BALANCE	PCT
9000	COMMUNITY BANKS OF SO COLORADO	850475.59					
9000.0100	DEPOSITS (CBC)	1411376.32-	126317.31	1285059.01-			
9000.0200	INTEREST EARNED	.00	.00	.00			
9000.0300	CREDIT CARD DEPOSIT	6822.73	1485.61	8308.34			
9000.0400	ACH/EFT DEPOSITS	826278.90	228140.84	1054419.74			
	SUB TOTAL *	272200.90 *	355943.76 *	628144.66 *			
9000.9100	TRANSFER OUT	.00	.00	.00			
	SUB TOTAL *	.00 *	.00 *	.00 *			
9000	FUND TOTALS	272200.90	355943.76	628144.66			
9100	TREASURERS CASH	700.00					
9100.0100	CASH ON HAND	.00	.00	.00			
	SUB TOTAL *	700.00 *	.00 *	700.00 *			
9100	FUND TOTALS	700.00	.00	700.00			
9200	COLO TRUST (INVESTMENT)	1026487.24					
9200.0100	TRANSFERS IN	.00	.00	.00			
9200.0200	INTEREST EARNED	348.55	28.47	377.02			
	SUB TOTAL *	1026835.79 *	28.47 *	1026864.26 *			
9200.9100	TRANSFER OUT (COLOTRUST)	.00	.00	.00			
	SUB TOTAL *	.00 *	.00 *	.00 *			
9200	FUND TOTALS	1026835.79	28.47	1026864.26			
9300	BANK OF THE WEST OPERATING ACCT	183781.46					
9300.0100	DEPOSITS (BOW)	10489902.51	568263.78-	9921638.73			
9300.0200	INTEREST EARNED	2426.66	400.00	2826.66			
9300.0300	CREDIT CARD DEPOSIT	736197.01	125362.57	861559.58			
9300.0400	ACH/EFT DEPOSITS	6162269.47	534884.55	6697154.02			
	SUB TOTAL *	17574577.11 *	92383.34 *	17666960.45 *			
9300.9100	TRANSFER OUT	15687388.26-	896720.54-	16584108.80-			
	SUB TOTAL *	15687388.26-*	896720.54-*	16584108.80-*			
9300	FUND TOTALS	1887188.85	804337.20-	1082851.65			
9350	BANK OF THE WEST MM ACCT	252273.64					
9350.0100	TRANSFERS IN (BOW MM)	1300000.00	.00	1300000.00			
9350.0200	INTEREST EARNED (BOW MM)	30.32	13.18	43.50			
	SUB TOTAL *	1552303.96 *	13.18 *	1552317.14 *			
9350.9100	TRANSFER OUT (BOW MM)	.00	.00	.00			
	SUB TOTAL *	.00 *	.00 *	.00 *			
9350	FUND TOTALS	1552303.96	13.18	1552317.14			
9375	BANK OF THE WEST CD START 3/29/18	300000.00					
9375.0100	TRANSFERS IN	.00	.00	.00			
9375.0200	INTEREST EARNED	.00	.00	.00			
	SUB TOTAL *	300000.00 *	.00 *	300000.00 *			
9375.9100	TRANSFERS OUT	.00	.00	.00			
9375	FUND TOTALS	300000.00	.00	300000.00			
9400	HCB CD START 4/18/13-CLOSED 4/25/19	.00					
9400.0100	TRANSFERS IN	.00	.00	.00			
9400.0200	INTEREST EARNED	.00	.00	.00			
9400.0300	XXXX	.00	.00	.00			
	SUB TOTAL *	.00 *	.00 *	.00 *			
9400.9100	TRANSFER OUT	.00	.00	.00			
	SUB TOTAL *	.00 *	.00 *	.00 *			

ACCT DESCRIPTION	BALANCE FORWRD	CURRENT	TOTAL YTD	PROJ REV	BALANCE	PCT
9400 FUND TOTALS	.00	.00	.00			
9500 HUERFANO CONSERVATION TRUST FUND	14605.13					
9500.0100 TRANSFERS IN	9583.15	.00	9583.15			
9500.0200 INTEREST EARNED	8.31	1.72	10.03			
SUB TOTAL *	24196.59 *	1.72 *	24198.31 *			
9500.9100 TRANSFER OUT	5049.44-	2192.83-	7242.27-			
9500.9130 BANK SERVICE CHARGE	.00	.00	.00			
SUB TOTAL *	5049.44-*	2192.83-*	7242.27-*			
9500 FUND TOTALS	19147.15	2191.11-	16956.04			
9600 CSAFE (INVESTMENT)	265882.14					
9600.0100 TRANSFERS IN	950000.00	.00	950000.00			
9600.0200 INTEREST EARNED	138.78	19.31	158.09			
SUB TOTAL *	1216020.92 *	19.31 *	1216040.23 *			
9600.9100 TRANSFER OUT	.00	.00	.00			
SUB TOTAL *	.00 *	.00 *	.00 *			
9600 FUND TOTALS	1216020.92	19.31	1216040.23			
9650 PEAKS INVESTMENTS MANAGEMENT	200000.00					
9650.0100 TRANSFERS IN	308694.21	.00	308694.21			
9650.0200 INTEREST EARNED	.00	.00	.00			
SUB TOTAL *	508694.21 *	.00 *	508694.21 *			
9650.9100 TRANSFERS OUT	.00	.00	.00			
SUB TOTAL *	.00 *	.00 *	.00 *			
9650 FUND TOTALS	508694.21	.00	508694.21			
9700 LPL FINANCIAL	1566800.29					
9700.0100 TRANSFERS IN	.00	.00	.00			
9700.0200 INTEREST EARNED	.00	.00	.00			
SUB TOTAL *	1566800.29 *	.00 *	1566800.29 *			
9700.0300 TRANSFER OUT	.00	.00	.00			
9700.9100 TRANSFER OUT	.00	.00	.00			
SUB TOTAL *	.00 *	.00 *	.00 *			
9700 FUND TOTALS	1566800.29	.00	1566800.29			
9800 WELLS FARGO (TRANSFD TO PEAKS INV)	308694.21					
9800.0100 TRANSFERS IN	.00	.00	.00			
9800.0200 INTEREST EARNED	.00	.00	.00			
SUB TOTAL *	308694.21 *	.00 *	308694.21 *			
9800.9100 TRANSFER OUT	308694.21-	.00	308694.21-			
9800 FUND TOTALS	.00	.00	.00			
9900 PFM FUNDS - CSIP (START 2/26/13)	320741.89					
9900.0100 TRANSFERS IN (CSIP)	.00	.00	.00			
9900.0200 INTEREST EARNED	88.33	5.56	93.89			
SUB TOTAL *	320830.22 *	5.56 *	320835.78 *			
9900.9100 TRANSFER OUT	.00	.00	.00			
9900 FUND TOTALS	320830.22	5.56	320835.78			
******** FUND TOTALS ********	8670722.29	450518.03-	8220204.26			

ACCT DESCRIPTION	BALANCE FORWRD	CURRENT	TOTAL YTD	PROJ REV	BALANCE	PCT

TIME FINISHED-10:38

MONTHLY REPORT OF HUERFANO COUNTY TREASURER
JUNE 31, 2021 THRU JULY 31, 2021

FUND	BEGINNING BALANCE	REVENUES------- REVENUES	DISBURSEMENTS-- DISBURSEMENTS	ENDING BALANCE
COUNTY GENERAL FUND	3,140,610.00	452,237.91	550,208.40-	3,042,639.51
JUDICIAL SALES TAX 1/1/2020	3,004.60			3,004.60
UNCLAIMED	935.48		248.15-	687.33
SPECIAL PROJECT FUND	931,912.33	105,899.61	129,838.63-	907,973.31
ROAD & BRIDGE	190,414.00	454,313.60	192,238.14-	452,489.46
LEASE PURCHASE FUND	0.00			0.00
EMERGENCY SERVICES FUNDS (DISPATCH)	630,240.61	100,128.87	63,827.70-	666,541.78
RETIREMENT	167,713.55	7,255.03	14,711.21-	160,257.37
LODGING TAX TOURISM FUND	33,428.64			33,428.64
DISASTER RECOVERY FUND	659,119.35	14,710.29		673,829.64
GARDNER PUBLIC IMPROVEMENT DISTRICT	21,306.50	14,143.48	18,605.64-	16,844.34
WALSENBURG GATEWAY METRO DIST	0.00			0.00
SPANISH PEAKS LIBRARY DIST	30,402.20	7,030.92	30,549.99-	6,883.13
SPANISH PEAKS LIBARY DIST (BOND)	27,000.09	6,183.14	27,131.39-	6,051.84
HUERFANO CO. AMBULANCE ENTERPRISE	0.00			0.00
WASTE TRANSFER STATION ENTERPRISE	57,882.37	9,702.61	10,070.31-	57,514.67
MINERAL LEASING	0.00			0.00
CREDIT CARD ADJ FUND	0.00			0.00
PUBLIC TRUSTEE	0.00			0.00
SOCIAL SERVICES	732,475.35	226,424.94	176,490.07-	782,410.22
HOSPITAL DISTRICT (OPERATING)	124,324.94	31,800.37	125,027.51-	31,097.80
HOSPITAL ANTIC. WARRANTS (BOND)	0.00			0.00
CITY OF WALSENBURG	66,319.23	40,898.55	67,305.23-	39,912.55
WALSENBURG TIF	3,171.60	957.68	3,171.60-	957.68
WAL (DOWNTOWN REV COMM) GID 28018	15.58			15.58
TOWN OF LAVETA	18,143.74	14,537.90	18,525.03-	14,156.61
LA VETA FIRE PROT. DIST.	26,070.82	8,695.43	26,280.72-	8,485.53
LA VETA CEMETERY DIST	2,381.47	794.31	2,400.64-	775.14
HUERFANO WATER CONS. DIST.	37,772.10	9,663.81	37,985.67-	9,450.24
NAVAJO WATER DIST.	4,844.12	954.98	4,863.94-	935.16
CUCHARA SAN. WATER DIST.	11,857.72	2,119.63	11,896.66-	2,080.69
LA VETA LIB. DIST.	25,991.92	8,669.14	26,201.17-	8,459.89
RYE FIRE DIST.	1,268.78	171.89	1,271.81-	168.86
ECONNOMIC & REVOLVING LOAN	0.00			0.00
CUCHARA BOND	0.00			0.00
UPPER HUERFANO CONSERVATION DIST	5,502.92	1,297.80	5,529.73-	1,270.99
UPPER HUERFANO FIRE DIST.	10,573.22	6,817.70	10,745.53-	6,645.39
HUERFANO CO FIRE PROTECTION DIST	59,263.63	10,726.70	59,471.22-	10,519.11
COUNTY CLERK	183,854.58	252,841.37	185,181.97-	251,513.98
COUNTY CLERK SUR CHARGE	4,402.61	319.00	570.26-	4,151.35
SCHOOL DIST. RE-1 GENERAL	76,852.01	83,409.81	76,998.69-	83,263.13
SCHOOL DIST. RE-1 CAP. RES.	0.00			0.00
SCHOOL DIST. RE-1 BOND	57,513.13	12,793.90	57,513.13-	12,793.90
SCHOOL DIST. RE-1 INSURANCE REV.	0.47			0.47
SCHOOL DIST. RE-2 GENERAL	46,775.23	38,608.92	46,852.89-	38,531.26
SCHOOL DIST. RE-2 CAP. RES.	0.00			0.00
SCHOOL DIST. RE-2 BOND	64,035.29	20,751.78	64,035.29-	20,751.78
TAX SALE & REDEMPTIONS	8,506.93	70,542.06	70,528.42-	8,520.57
BACK TAX UNAPPORTIONED	0.00			0.00
FEDERAL FOREST PROJECT FUND	57,577.97		3,382.50-	54,195.47
XXXX	0.00			0.00
TREASURERS FEES	0.00	9,393.79	9,393.79-	0.00
SPECIFIC OWNERSHIP	0.00	91,519.96	91,519.96-	0.00
LAND USE FUND	559,892.00			559,892.00
CONSERVATION TRUST FUND	19,147.15	1.72	2,192.83-	16,956.04
MOTOR VEHICLE	0.00	3,571.68	3,571.68-	0.00
FEDERAL LAND & MATERIALS ACT	367.59			367.59
US FOREST RESERVE	4,620.00			4,620.00

NAVAJO BOND	0.00			0.00
WALSENBURG HOUSING AUTHORITY	0.00			0.00
ADVANCE TAX COLLECTIONS	8,168.57	454.43		8,623.00
COUNTY PROPERTY SALES	765.00			765.00
PILT	554,296.55	14,710.29-	329,815.00-	209,771.26
REAL ESTATE INT.UNAPPORTIONED	0.00			0.00
BUSINESS RECRUITMENT FUND	0.00			0.00
COURT HOUSE RE-HAB	0.00			0.00
PURGATOIRE RIVER SOIL CONS. DIST.	0.35	.05		0.40
BUSINESS RECRUITMENT	0.00			0.00
EMERGENCY RESERVE FUND	0.00			0.00
GRAND TOTALS	$8,670,722.29	$2,105,634.47	$2,556,152.50-	$8,220,204.26

I DEBRA J REYNOLDS, TREASURER IN AND FOR THE COUNTY OF HUERFANO, AND THE STATE OF COLORADO, HEREBY CERTIFY THAT THE FOREGOING IS A TRUE AND JUST COPY OF THE FUND BALANCES, RECEIPTS AND DISBURSEMENTS OF RECORDS OF MY OFFICE FOR CURRENT MONTH, AND TRUE TO THE BEST OF MY KNOWLEDGE

8-10-2021

DATE:

Debra J Reynolds

HUERFANO COUNTY TREASURER:

MONTHLY REPORT OF HUERFANO COUNTY TREASURER
JUNE 31, 2021 THRU JULY 31, 2021

FUND	BEGINNING BALANCE	REVENUES DEPOSITS	INTEREST EARNED	TRANSFERS (IN)	DISBURSEMENTS TRANSFERS (OUT)	ENDING BALANCE
COMMUNITY BANKS OF SO COLORADO	272,200.90	126,317.31		229,626.45		628,144.66
TREASURERS CASH	700.00					700.00
COLO TRUST (INVESTMENT)	1,026,835.79		28.47			1,026,864.26
BANK OF THE WEST OPERATING ACCT	1,887,188.85	568,263.78-	400.00	660,247.12	896,720.54-	1,082,851.65
BANK OF THE WEST MM ACCT	1,552,303.96		13.18			1,552,317.14
BANK OF THE WEST CD START 3/29/18	300,000.00					300,000.00
HCB CD START 4/18/13-CLOSED 4/25/19	0.00					0.00
HUERFANO CONSERVATION TRUST FUND	19,147.15		1.72		2,192.83-	16,956.04
CSAFE (INVESTMENT)	1,216,020.92		19.31			1,216,040.23
PEAKS INVESTMENTS MANAGEMENT	508,694.21					508,694.21
LPL FINANCIAL	1,566,800.29					1,566,800.29
WELLS FARGO (TRANSFD TO PEAKS INV)	0.00					0.00
PFM FUNDS - CSIP (START 2/26/13)	320,830.22		5.56			320,835.78
GRAND TOTALS	$8,670,722.29	$441,946.47-	$468.24	$889,873.57	$898,913.37-	$8,220,204.26

I, DEBRA J REYNOLDS, County Treasurer in and for the county of HUERFANO in the State of Colorado, do hereby certify that the above is a true statement of the condition of the various funds as they appear from the records in my office for the current month.

8-10-2021
DATE

Debra J Reynolds
HUERFANO COUNTY TREASURER